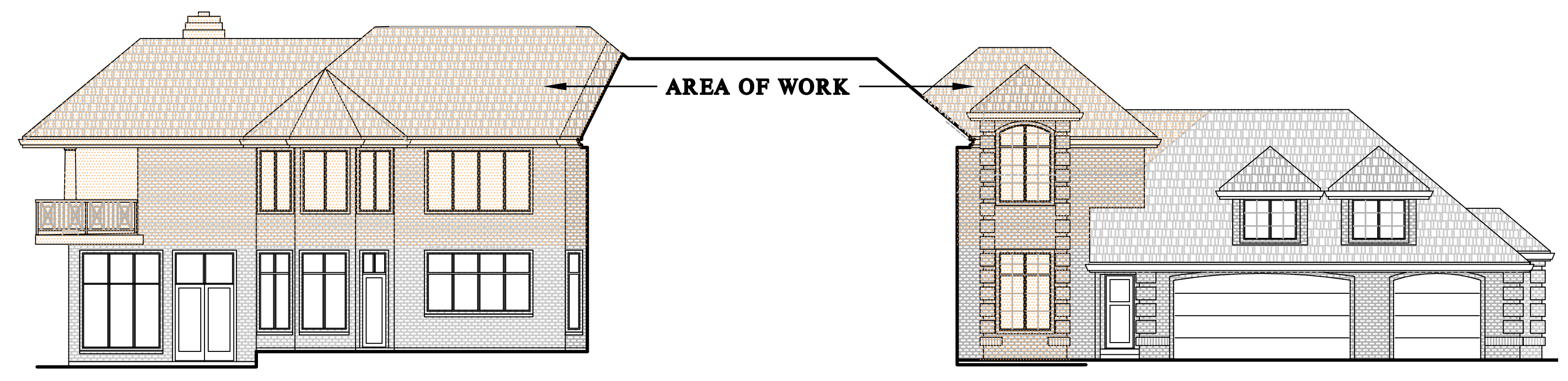
AREA OF WORK

Side Elevation

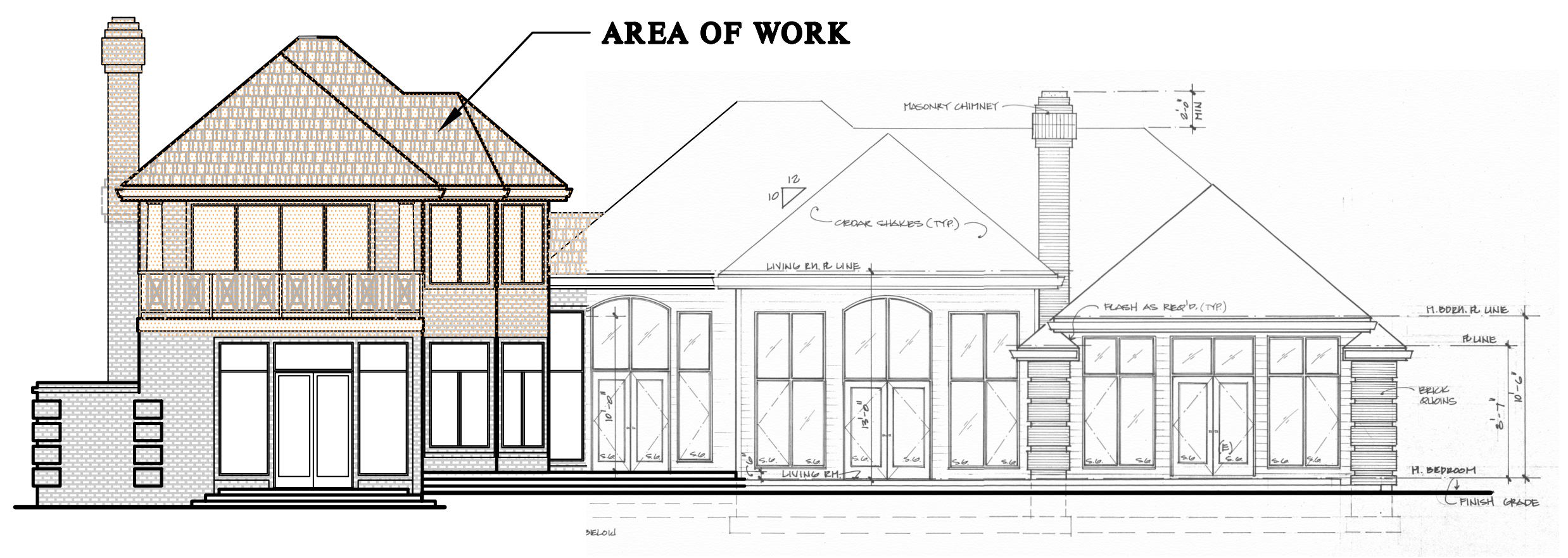
AREA OF WORK

Rear Elevation

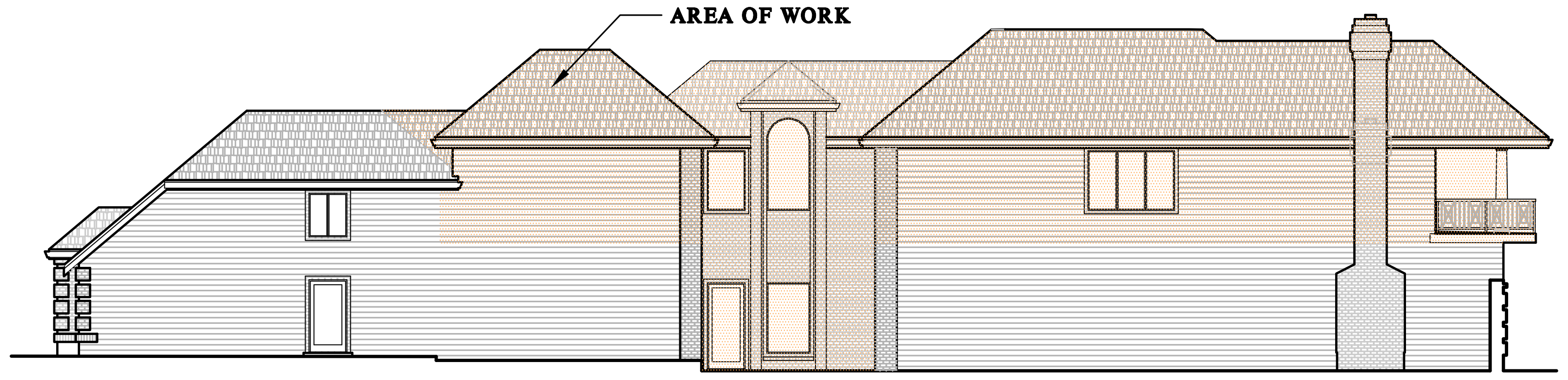
AREA OF WORK

Side Elevation

Lee Remodel

8448 N Mercer Way, Mercer Island, WA

SQUARE FOOTAGE

	EXST'G	ADD'D	PROPOSED
MAIN FLOOR	4,830 SF	+142 SF	4,972 SF
UPPER FLOOR	530 SF	+1,821 SF	2,351 SF
TOTAL	5,360 SF	+1,963 SF	7,323 SF
GARAGE	820 SF	+0 SF	820 SF
PORCH	240 SF	+0 SF	240 SF
DECK	0 SF	+176 SF	176 SF

DRAWING INDEX

A1.	CODE NOTES
A1.1.	SITE PLAN SURVEY
A2.	ARCHITECTURAL FOUNDATION PLAN
A3.	MAIN FLOOR PLAN
A4.	UPPER FLOOR PLAN
A5.	ARCHITECTURAL ROOF PLAN
A6.	ELEVATIONS
A7.	ELEVATIONS
A8.	BUILDING SECTION
A9.	AS-BUILT MAIN FLOOR
A10.	AS-BUILT UPPER FLOOR
A11.	AS-BUILT ROOF PLAN
A12.	AS-BUILT ELEVATIONS
D1.	STANDARD DETAILS
E1.	ENERGY FORMS
S-0.0.	STRUCTURAL NOTES
S-1.0.	FOUNDATION PLAN
S-1.1.	STRUCTURAL PLAN
S-2.0.	STRUCTURAL PLAN
S-3.0.	STRUCTURAL PLAN
SD.01.	FOUNDATION DETAILS
SD-1.	STRUCTURAL DETAILS
SD-2.	STRUCTURAL DETAILS

SCOPE OF WORK

1. 142 SF ADDITION TO THE MAIN FLOOR TO PROVIDE NEW ACCESS TO THE UPPER FLOOR, ELEVATOR, AND NEW MECHANOCAL ROOM.
2. KITCHEN REMODEL TO PROVIDE NEW PANTRY, LAUNDRY ROOM, AND POWDER ROOM.
3. 1,821 SF ADDITION TO THE UPPER FLOOR TO ROVIDE NEW MAIN SUITE WITH BATH AND W.I.C., AND MEDIA ROOM.

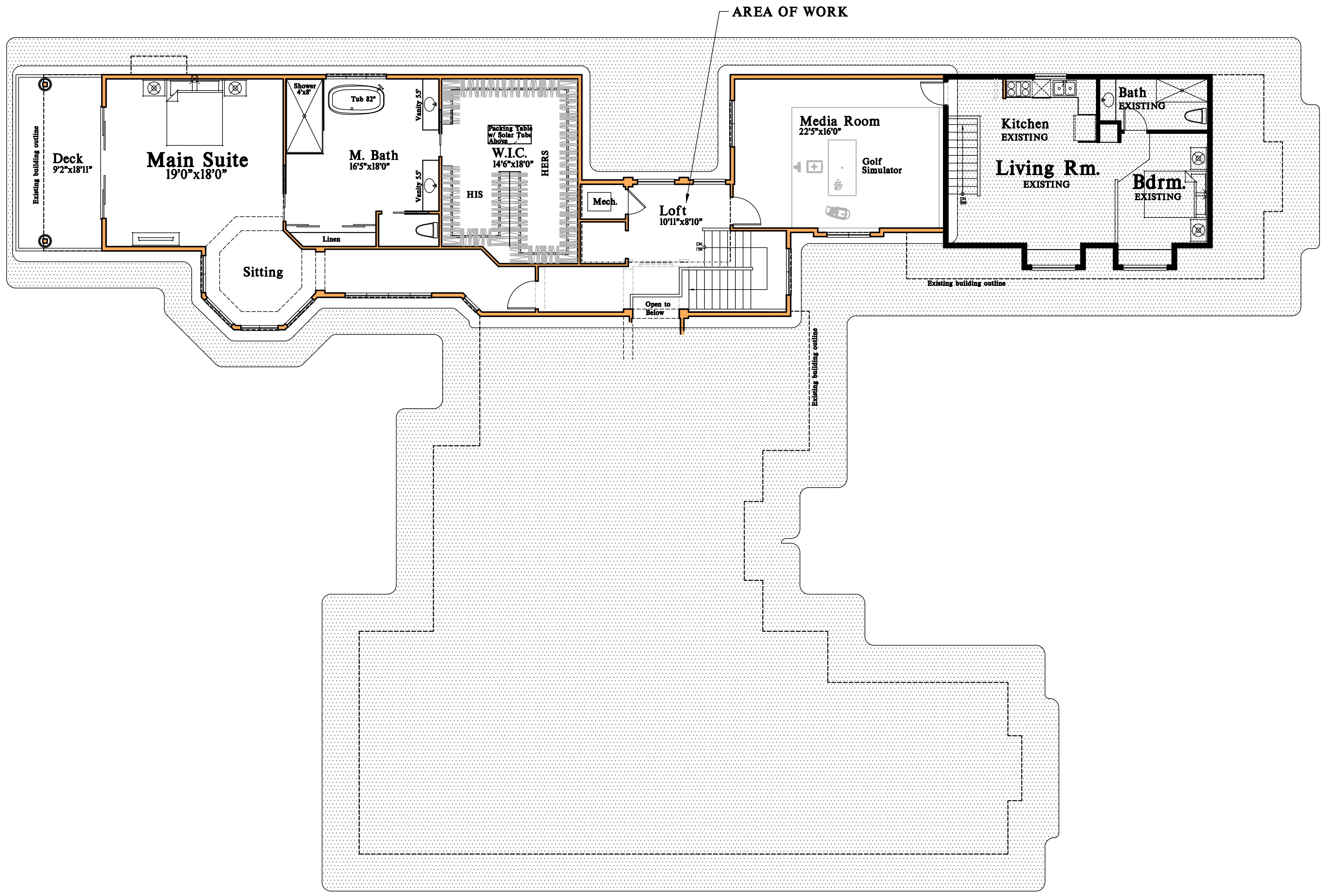
AREA OF WORK
Deck
9'2"x18'11"
Existing building outline
Main Suite
19'0"x18'0"
Sitting
Shower 4'x8'
Tub 82"
Vanity 5.5'
Vanity 5.5'
M. Bath
16'5"x18'0"
Linen
Packing Table w/ Solar Tube Above
W.I.C.
14'6"x18'0"
HIS
HERS
Mech.
Loft
10'11"x8'10"
Open to Below
Existing building outline
Media Room
22'5"x16'0"
Golf Simulator
Kitchen
EXISTING
Living Rm.
EXISTING
Bath
EXISTING
Bdrm.
EXISTING
Existing building outline

Upper Floor Plan

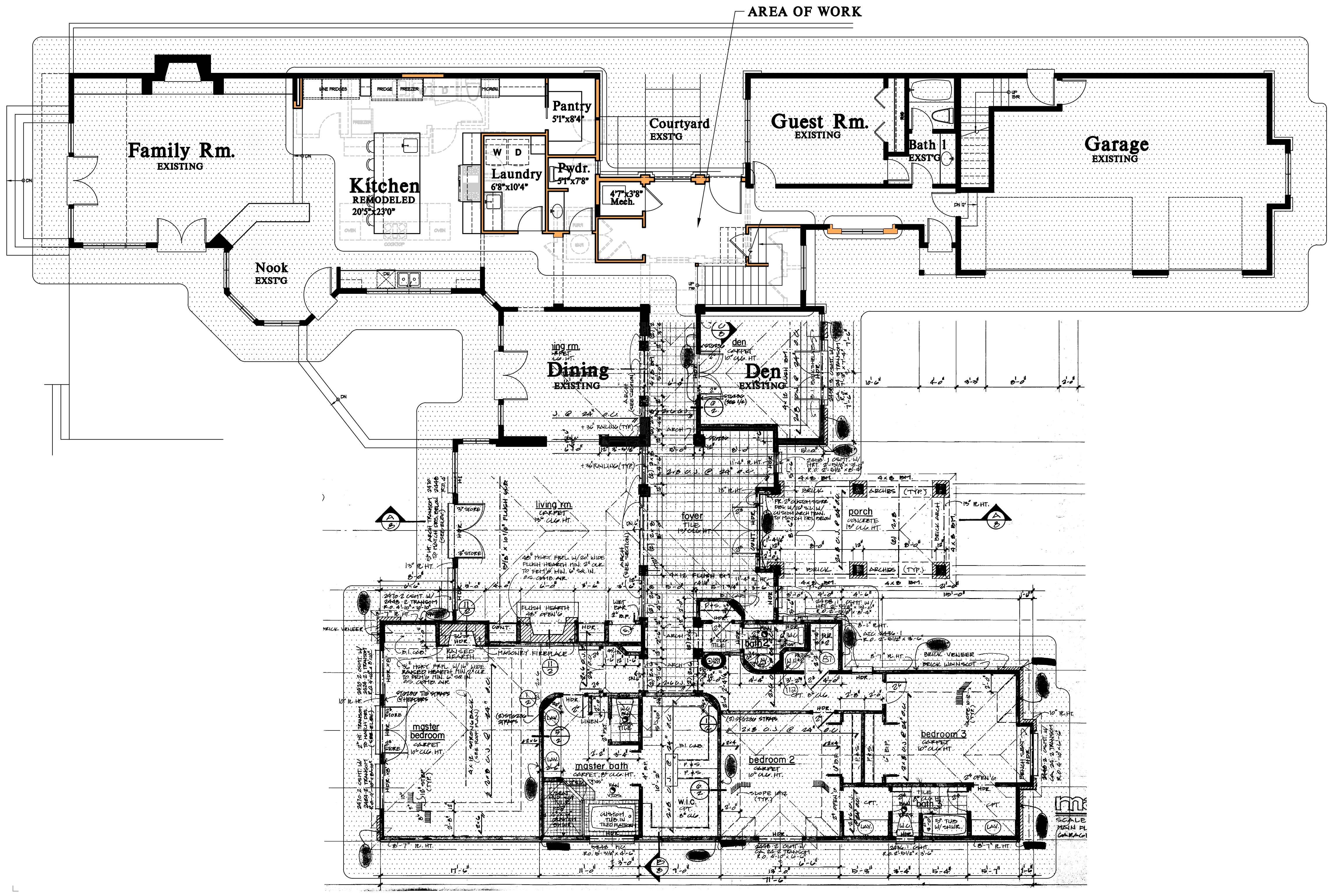
AREA OF WORK
Family Rm.
EXISTING
WINE FRIDGES
FRIDGE
FREEZER
MICROW
Kitchen
REMODELED
20'5"x23'0"
Pantry
5'1"x8'4"
W
D
Laundry
6'8"x10'4"
Pwdr.
5'1"x7'8"
4'7"x3'8"
Mech.
Courtyard
EXST'G
Guest Rm.
EXISTING
Bath 1
EXST'G
Garage
EXISTING
Nook
EXST'G
Dining
EXISTING
Den
EXISTING
living rm.
foyer
porch
master bedroom
master bath
bedroom 2
bedroom 3

Main Floor Plan

Date	By	Description
9/4/24	AG	PERMIT SET

Lee Remodel

8448 N Mercer Way, Mercer Island, WA

ARCHITECTURAL INNOVATIONS, P.S.
Forward Thinking Design Solutions For Your Environment
14311 SE 16th St
Bellevue, WA 98007
1-800-888-4517
www.kapplerhomeplans.com

TITLE

JOB NO. : 23050.05
STARTING NO. : 23050.03

SHEET

COVER SHEET

Division 1
GENERAL REQUIREMENTS

01000 GENERAL

1. This coversheet has been prepared in a generic outline form following the standards set by the Construction Standards Institute (CSI). It is for the convenience of the Contractor/Owner. This outline is intended to work with a material selection list following the (CSI) format. Not all items are necessarily required to complete this specific project. Coordinate with Contractor/Owner for complete listing of specifications. Within this coversheet it will state, "Coordinate with materials finish selection schedule".

2. These drawings are copyrighted. ARCHITECTURAL INNOVATIONS P.S. retains all rights, ownership and copyright of this design under the federal copyright act. Reproductions of illustrations or working drawings in any form is by authorization of ARCHITECTURAL INNOVATIONS P.S. only.

3. Authorized reproductions must bear the name of ARCHITECTURAL INNOVATIONS P.S.

4. Construction/working drawings by their very nature are diagrammatic and do not purport to show all details or conditions of construction. Questions generally arise to the architectural/design intent and to construction technical detailing within these drawings. As clarifications, interpretations, and revisions are all part of the construction process. ARCHITECTURAL INNOVATIONS P.S., therefore shall not be liable for any direct, indirect, or consequential damages as a result of not participating in the construction process.

5. Do not vary or modify the work shown, except with written instruction from ARCHITECTURAL INNOVATIONS P.S. Report discrepancies and/or omissions to the architect immediately.

6. Due to the nature of construction and the building process there will be bidder design and Contractor/Owner selection of the building products, components, and assemblies. This set of working drawings is considered a "builder set" and does not include specifications or building materials list. Therefore it is the Contractor/Owners responsibility to provide and coordinate specifications, including product selection and installation or assembly. ARCHITECTURAL INNOVATIONS P.S. assumes no liability or responsibility for discrepancies or conflicts which occur through Contractor/Owner specified materials and their respective installation. ARCHITECTURAL INNOVATIONS P.S. assumes no liability or responsibility for any items, which may be called out or referred to by manufacturer as brand name. Items called out are done so for convenience only.

7. Do not scale these drawings for critical dimensions. Verify all dimensions and datum's before commencing work and be responsible for their accuracy. Report discrepancies and/or omissions to the architect immediately.

8. The Contractor/Owner is responsible for coordinating work with all trades to ensure proper and adequate interface of all trade works. The contractor shall be responsible for all required safety precautions and procedures required to do this work.

9. Except as specifically defined otherwise, interpretation for all definitions, abbreviations, and supplemental definitions shall follow accepted referenced standards.

10. All work within this contract shall represent that of industry standards for the respective trades in the location in which the project is built.

All references to I.R.C, I.B.C., and W.S.E.C are references to the 2021 code updates & WA state Amendments.

01002 MISCELLANEOUS ASSEMBLY REQUIREMENTS

1. Provide crawl space access, minimum 18" x 24" unobstructed access through the floor, 16" x 24" through perimeter walls and below grade access, per I.R.C. section R408.4. Insulate and weather-strip per W.S.E.C R402.2.4. Allow 18" minimum space under wood joists and 12" minimum space under wood girders.
2. Provide attic access, minimum 22" x 30" with 30" minimum headroom, at unobstructed readily accessible opening, per I.R.C. section R807.1. Insulate and weather-strip per WSEC R402.2.4. requirements.
3. Provide ventilation per I.R.C. as follows:
A) Crawl space ventilation: Minimum net area shall be not less than 1 s.f. per 300 s.f. under floor area. Required openings shall be evenly placed to provide cross ventilation of the space except one side of the building shall be permitted to have no ventilation openings per section R408.2.
B) Attic ventilation: Minimum net area shall be not less than 1 s.f. per 150 s.f. of attic area or 1 s.f. per 300 s.f. of attic area if at least 40 percent, and not more than 50 percent, of the required ventilating area is provided by ventilators located in the upper portion of the space to be ventilated, and is no more than 3 feet below the ridge or highest point of the space. The balance of required ventilation to be provided by eave or cornice vents per I.R.C. section R806.2 and W.S.E.C. requirements.
4. Slope all decks, walks, driveways, exterior door landings, and patios away from building. Minimum 1/4" per foot.
5. Provide approved numbers or addresses in such a position as to be plainly visible and legible from the street or road fronting the property per I.R.C. section R319.1.
6. Garage/House separation:
A) Garage ceilings separating attic spaces shall be protected with 1/2" G.W.B. When garages are beneath habitable rooms, the ceilings shall be covered with 5/8" type "x" GWB on the garage side. Where the separation is a floor/ceiling assembly, the structure shall be protected with 1/2" G.W.B. per I.R.C. table R302.6.
B) Door between garage and house shall be a self closing solid wood core, honeycomb core steel, or 20-minute fire rated door having a minimum thickness of 1-3/8" per I.R.C. section R302.5.1.
C) Ducts in the garage and ducts penetrating the walls or ceilings separating the dwelling from the garage shall be constructed of a minimum No. 26 gage sheet steel or other approved material and shall have not openings into the garage per I.R.C. R302.5.2.
D) Garage floor shall slope to facilitate the movement of liquids to a drain or toward the main vehicle entry doorway.
7. Stair assembly:
A) Minimum headroom height 6'-8" per I.R.C. section R311.7.2.
B) Minimum stair tread depth 10" with a 36" minimum width, measured above handrail height. Maximum riser height 7-3/4" per I.R.C. sections R311.7.5 & R311.7.6.
C) Top of handrail shall be 34" minimum and 38" maximum above tread nosing and not less than 1-1/2" from the wall. Return rail ends to wall per I.R.C. section R311.7.8.
D) Install fire blocking between stringers at the top and bottom of each run per I.R.C. section R302.11.
E) Cover usable space under stairs with 1/2" GWB per I.R.C. section R302.7.
8. Laundry Chutes & Dumbwaiter Shafts - provide 5/8" type "x" GWB or 26 gage sheet metal with lock joints on all openings to shaft surfaces shall be self closing solid core door 1-3/8".
9. Fireblocking shall be provided in wood-frame construction in the following locations:
A) In concealed spaces of stud walls and partitions, including furred spaces and parallel rows of studs or staggered studs, as follows:
1. Vertically at the ceiling and floor levels.
2. Horizontally at intervals not exceeding 10 feet.
B) At all interconnections between concealed vertical and horizontal spaces such as occur at soffits, drop ceilings and cove ceilings.
C) In concealed spaces between stair stringers at the top and bottom of the run. Enclosed spaces under stairs shall comply with Section R302.7.
D) At openings around vents, pipes, ducts, cables and wires at ceiling and floor level, with and approved material to resist the free passage of flame and products of combustion.
E) For the fireblocking of chimneys and fireplaces, see Section R1003.19.
F) Fireblocking of cornices of a two-family dwelling is required at the line of swelling unit separation.
10. Fireblocking shall consist of the following materials per I.R.C. R302.11.1.
A) 2" nominal lumber.
B) Two thickness of 1" nominal lumber with broken lap joints.
C) One thickness of 22/32" wood structural panels with joints backed by 23/32" wood structural panels.
D) One thickness of ¾" particleboard with joints backed by ¾" particleboard.
E) One ½" gypsum board.
F) One ¼" cement-based millboard.
G) Batts or blankets of mineral wool or glass fiber or other approved materials installed in such a manner as to be securely retained in place.
11. Structural design criteria: These notes are provided for convenience only and do not imply that complete structural analysis has been done on this structure.
A) Truss Loading: (U.N.O.)

Top chord live load:	25psf		
Top chord dead load:	7psf		
(15 psf, if tile)			
Bottom chord live load:	10psf without storage	20psf if limited storage	30psf if sleeping room
TOTAL LOAD:	42psf	or 52psf	or 62psf

B) Roof live load: 25 psf (U.N.O.)
C) Floor live load: 40 psf (U.N.O.) Deck Live Load 60 psf U.N.O.
D) Stair and corridor live load: 40 psf
E) Mechanical units: weights provided by manufacturer
F) Wind: 110 mph (U.N.O.)
G) Seismic Design Category: D(2) (U.N.O.)
H) Allowable soil pressure: Unless a soils report by a qualified engineer is provided, all footings and foundations shall be on assumed 1,500 psf bearing capacity unless otherwise noted on drawing.
J) Equivalent fluid pressure 35 pcf. (U.N.O.)
K) All footings to be located below the frost line depth: 18" (U.N.O.)

01002 MISCELLANEOUS ASSEMBLY REQUIREMENTS CONT.

12. Prefabricated Fireplaces and Solid Fuel Burning Appliances per I.M.C. and I.R.C. Chapter 101:
A) Solid fuel burning appliances include airtight stoves, fireplace stoves, room heaters/fireplace stoves, factory built fireplaces, and fireplace inserts, and all shall comply with the provisions of I.M.C.
B) Metal Chimneys shall be enclosed above the story in which the appliance served is located, in walls having one hour fire resistance rating, and with a space on all sides between chimney and enclosing walls sufficient for examination and repair for entire chimney. Walls shall be without openings per I.M.C.
C) Provide fireblocking at chimney per I.R.C. section R302.11.
D) Install metal fireplace with hearth and surrounds per manufacturers specifications.
E) Prefabricated fireplaces, chimneys, and related components to bear U.L. or ICBO seal of approval and be installed per manufacturers requirements.
13. Fireblocking per I.R.C. sections R302.11.

01060 REGULATORY REQUIREMENTS

1. All construction shall conform to the 2021 International Residential Code (I.R.C.), 2021 International Building Code (I.B.C.), 2021 International Fire Code (I.F.C.), 2021 International Mechanical Code (I.M.C.), 2021 Uniform Plumbing Code (U.P.C.), 2021 Washington State Energy Code (W.S.E.C.) and be in accordance with all State Laws and Regulations and various codes imposed by jurisdictional requirements and local authorities.
2. Arrange inspections that are mandatory due to jurisdictional requirements.

01500 CONSTRUCTION FACILITIES AND TEMPORARY CONTROLS

1. Provide Temporary Facilities - including electricity, water, and temporary toilet, per jurisdictional requirements.
2. Provide Contemporary Controls - including erosion sediment and surface water control and entrapment during construction per jurisdictional requirements.

END DIVISION 1

Division 2
SITE WORK

02200 EARTHWORK
Part 3 - Execution
1. Rough grading: 4" below finish grading unless otherwise specified.
2. Finish grading: Landscaping division 02900.
3. Excavation, backfilling, and compacting for structures as needed.
4. Excavation, backfilling, and compacting for pavement as needed.
5. Hauling and disposal of excavated material as needed.
6. Importing of material as needed.
7. Rock removal as needed.

02500 PAVING AND SURFACING

Part 2 - Product
1. Walk, road, and parking paving:
A. Asphalt 2", class B, over 3" crushed rock or 2" ATB.
B. Crushed rock 5/8" minus.
C. Concrete per Division 3:
1. Finish and color:
Coordinate with materials finish selection schedule.
2. Unit Pavers: 1. Coordinate with materials finish selection schedule.
3. Pavement marking: 1. Coordinate with materials finish selection schedule.

02700 SEWAGE AND DRAINAGE

Part 2 - Product
1. Subdrainage systems:
A. Foundation drainage 4" SDR 35 or sched. 40 rigid PVC perforated pipe embedded in pea gravel or clean crushed rock and wrapped in filter fabric.
2. Storm sewage systems:
A. Exterior catch basins, grates, and frames:
1. Coordinate with materials finish selection schedule.
B. Culverts:
1. Coordinate with materials finish selection schedule.
C. Drain pipe: 4" ADS non-perforated tight line.
3. Sanitary sewage systems:
A. Sewage collection lines 8" PVC unless cast iron is noted.
B. Septic system: Per drawings of bidders designer.
Part 3 - Execution
1. Subdrainage system:
A. Slope to drain and surround in well draining material per details.
2. Surface drainage per I.R.C. section R401.3.

02800 SITE IMPROVEMENTS

Part 2 - Product
1. Irrigation system: Bidder design
1. Coordinate with materials finish selection schedule.
2. Fences and gates:
1. Coordinate with materials finish selection schedule.

02900 LANDSCAPING

Part 2 - Product
Bidder Design

END DIVISION 2

Division 3
CONCRETE

03100 CONCRETE FORMWORK

Part 3 - Execution
1. Formwork and bracing for structural cast-in place concrete shall be by subcontractor and meet the requirements of the drawings and industry standards.
2. All formwork shall be placed in such a manner as to allow cast-in place concrete to be placed on solid substrate and to allow structural support members to sit below the frost line.

03200 CONCRETE REINFORCING

Part 2 - Product
1. Reinforcing steel: Deformed bar sizes and locations per plans and details. Grade 60, Fy' = 60ksi per I.R.C. section R404.1.3.3.7.1. Unless otherwise noted per Engineer.
2. Welded wire fabric: at locations per plans and details: 6x6, W1.4xW1.4WWF.
Part 3 - Execution
1. A minimum lap for all bars shall be 40 diameters taken from the smallest bar. Provide corner bars to match horizontal reinforcement. Minimum coverage per details and I.R.C. section R404.1.3.3.7.5.

03250 CONCRETE ACCESSORIES

Part 2 - Product
1. Anchor bolts: 1/2"φ triple zinc ZMAX (G185 per ASTM A653) hot dipped galvanized steel (ASTM 153 for Anchors), with a minimum 7" embedment, per I.R.C. section R403.1.6., unless otherwise noted per Engineer.
2. Washers: 3"x3"x1/4" sq. triple zinc ZMAX (G185 per ASTM A653) hot dipped galv. steel (ASTM 153 for Anchors), plate washers per I.R.C. section R602.11.1. Unless otherwise noted per Engineer.
Part 3 - Execution
1. Anchor bolts at 6'-0" o.c. max. for one story & 4'-0" o.c. for buildings over two stories in height, 12" from corners and joints, with a minimum embedment of 7". Provide a minimum of (2) bolts per plate section per I.R.C. section R403.1.6.

03300 CAST-IN-PLACE CONCRETE

Part 2 - Product
1. Structural concrete: Design f'c = 2500 psi min 5-1/2 sacks of cement per cubic yard of concrete and a maximum of 6.0 gallons of water per 94lb sack of cement at 28 days. Max slump is 4". segregation of materials to be prevented. Use f'c = 3000 psi concrete at 28 days with air entrainment only for concrete exposed to weather, in accordance with I.R.C. Table R402.2. Special inspection not required unless noted otherwise per Engineer.
2. Architectural concrete: for exposed aggregate finish (washed), f'c = 2000 psi at 28 days, with 3/8" round aggregate.

03300 CAST-IN-PLACE CONCRETE (cont.)

3. Admixtures:
A. All concrete shall have water reducing admixtures except for footings.
B. Air entrainment shall be 5-7% in all concrete exposed to weather, I.R.C. Table R402.2
C. Coloring agent:
1. Coordinate with materials finish selection schedule.
Part 3 - Execution

END DIVISION 3

Division 4
MASONRY

04100 MORTAR
Part 2 - Product
1. Type "M" or "S" mortar with integral waterproofing agent per I.R.C. section R606.2.8
Part 3 - Execution
1. Per I.R.C. section R606.2

04150 MASONRY ACCESSORIES
Part 2 - Product
1. Anchors and Ties: To be corrosion-resistant metal ties per I.R.C. section R703.8.4.
2. Joint reinforcement: Standard strand no. 9 U.S. gage wire per I.R.C. section R703.8.
Part 3 - Execution
1. Per I.R.C. Chapter 7.

04200 UNIT MASONRY
Part 2 - Product
1. Brick masonry:
A. Exterior locations: name/mfg:
1. Coordinate with materials finish selection schedule (by others).
B. Interior locations: name/mfg:
1. Coordinate with materials finish selection schedule (by others).
C. Pavers/planters: name/mfg:
1. Coordinate with materials finish selection schedule (by others).
2. Concrete masonry units: grade N-1 CMU, unless otherwise indicated sizes per drawings.
A. Special units:
1. Coordinate with materials finish selection schedule (by others).
3. Glass masonry units: (glass block) Per I.R.C. section R607.
A. Exterior locations: name/mfg:
1. Coordinate with materials finish selection schedule (by others).
B. Interior locations: name/mfg:
1. Coordinate with materials finish selection schedule (by others).

Part 3 Execution
1. Brick and Veneer:
A. Brick veneer shall be supported on footings, foundation, or other non-combustible supports. It shall have 15# felt backing and No. 9 gauge, non corrosive ties at 1 per each 2 s.f. of veneer. Provide 1" minimum air space between veneer and backing. Provide approved flashing at base of veneer with 3/16" min. round weepholes at 33" o.c. max., located immediately above the flashing, extending from the air space to the exterior. Veneer shall support no load other than its own weight and the vertical dead lead of veneer above. Provide angle iron support at doors, windows, and other openings per R606.10.
2. Concrete masonry unit (CMU)
A. Concrete masonry unit walls shall be constructed to conform to ASTM C90. It shall be laid up, reinforced, and anchored as shown on drawings.

04400 STONE
Part 2 - Product
1. As shown on drawings.
A. Exterior locations: name/mfg:
1. Coordinate with materials finish selection schedule (by others).
B. Interior locations: name/mfg:
1. Coordinate with materials finish selection schedule (by others).

Part 3 Execution
1. Stone Veneer:Adhered per manufacturer's installation instructions and in accordance with I.R.C. R703.12.1
A. On exterior stud walls, adhered masonry veneer shall be installed:
1. Minimum of 4 inches above the earth.
2. Minimum of 2 inches above paved areas. or
3. Minimum of 1/2 inch above exterior walking surfaces which are supported by the same foundation that supports the exterior wall.
B. Flashing at foundation:
1. A corrosion-risistant screed or flashing of a minimum 0.019-inch or 26-gage galvanized or plastic with a minimum vertical attachment flange of 3½ inches shall be installed.

END DIVISION 4

DIVISION 5
METALS

05050 METAL FASTENINGS
Part 2 - Product
1. Bolts: Use sizes and shapes per dwgs, or as needed for intended purposes. Bolts, nuts and cut washers in contact with treated wood to be triple zinc ZMAX (G185 per ASTM A653) hot dipped galvanized steel (ASTM 153 for Anchors).

05500 METAL FABRICATION
Part 2 - Product
1. Handrails and guardrails: Provide in sizes and locations as shown per dwg.

END DIVISION 5

Division 6
WOOD AND PLASTICS

06100 ROUGH CARPENTRY
Part 2 - Product
1. Framing Lumber: Framing lumber shall be marked in conformance with the United States Dept. of Commerce, Standard Reference No. PS 20 (DOC PS 20) standards. All Kiln dried minimum 19%.
A. Joist and rafters: (2x6 and larger) Hem-Fir #2 or better.
B. Beams and stringers: (4x and larger) Doug-Fir #2 or better.
C. Post and timbers: Doug-Fir #1.
D. Studs, plates, and misc. light framing: Hem-Fir #2 or better.
E. " I " Joists and Engineered beams: Per manufacturer.
F. Glue laminated timber:
1. Simple span: 24F V4 DF/N3WN
2. Continuous or cantilever: 24F V8 DF/DF
G. All other lumber: Hem-Fir Standard or better.
H. Plywood/oriented strand board (O.S.B.): APA graded.
I. Wall sheathing: see "TYPICAL BUILDING MATERIALS" list on the dwgs.
J. Floor sheathing: see "TYPICAL BUILDING MATERIALS LIST"on the dwg.
K. Other: As noted on drawings.
L. All wood members in contact with exposed concrete to be pressure treated members.
2. Particle Board: A.P.A. graded
A. Underlayment
1. Floors: 5/8" (U.N.O.)
2. Sheet vinyl: 1/4" (U.N.O.) see division 9
3. Cabinet surfaces 3/4" (U.N.O.)
3. Trusses:
A. Prefabricated connector plate wood roof trusses shall be designed and stamped by the manufacturer in accordance with the "design specification for metal plate connected wood trusses". Design drawings and details to be available upon request.
B. See "Roof Framing Notes" on drawings.
C. Roof design, layout, loading, and bracing shall be by manufacturer.
D. Field alterations of truss must be designed by manufacturer.
4. Fasteners and adhesives: All nails shall be common wire of sizes for intended purpose per I.R.C. table R602.3(1). Attach timber joists to flush headers and beams with Simpson "U" hanger series or equal to suit intended purpose. Simpson connectors at other locations as outlined per drawings. Bolt heads, nuts, and cut washers per Division 5. Connectors and fasteners in contact with treated wood to be triple zinc ZMAX (G185 per ASTM A653) hot dipped galv. steel (ASTM 153 for Fasteners), stainless steel, silicone bronze, or copper as required per dwgs.
5. Post to mat footing connection. Provide pressure treated post and positive connection to footing per I.R.C. section 502.9.
6. All exposed glue laminated wood, if not protected by a roof or eave, must be preservative-treated.

Part 3 - Execution
1. The following will apply unless shown on drawings. All wood framing details shall be constructed to the minimum standards in the I.R.C. All framing shall conform to the requirements of Chapters 5,6, and 8 of the I.R.C. Minimum nailing shall conform to table R602.3(1) of the I.R.C. Height and spacing of studs shall conform to table R602.3(5) of the I.R.C.

06200 FINISH CARPENTRY
Part 2 - Product
1. Cabinets:
A. Coordinate with materials finish selection schedule (by others).
2. Millwork and casing:
A. Coordinate with materials finish selection schedule (by others).
3. Paneling:
A. Coordinate with materials finish selection schedule (by others).
4. Stair and handrail by:
A. Coordinate with materials finish selection schedule (by others).
B. See division 01002.7 misc. assembly requirements.
5. Bookcases and built-in shelves:
A. Coordinate with materials finish selection schedule (by others).
6. Plastic laminate and solid surface material:
A. Coordinate with materials finish selection schedule (by others).

END DIVISION 6

Division 7
THERMAL AND MOISTURE PROTECTION

07150 WATER PROOFING & DAMP PROOFING
Part 2 - Product
1. Per I.R.C. section R406.
Part 3 - Execution
1. Per I.R.C. section R406.

07190 VAPOR AND AIR RETARDER
Part 2 - Product
1. Ground cover: 6 mil polyethylene: black, with 12" minimum lap.
2. Building wrap: see the "TYPICAL BUILDING MATERIALS" list on the drawings.

Part 3 - Execution
1. See Division 17, Energy Requirements.

07200 INSULATION
Part 2 - Product
1. Fiberglass or mineral wood batts, bloom mineral wool, and extruded polystyrene:
A. Walls: 1. See the "TYPICAL BUILDING MATERIALS" list on the dwgs.
B. Ceiling: 1. See the "TYPICAL BUILDING MATERIALS" list on the dwgs.
C. Floor: 1. See the "TYPICAL BUILDING MATERIALS" list on the dwgs.
D. Slab on Grade: R-10 (per W.S.E.C. Table R402.1.1).
2. Insulating foam: A. Standard sealant foam.

Part 3 - Execution
1. See division 17: energy requirements
2. Provide insulation markers for blown-in or sprayed insulation every 300 sq ft. Markers shall face the attic access per IECC Sec 303.1.1.1
3. Crawl Space/Cantilevered floors: Insulation shall be installed to maintain permanent contact with the underside of the sub-floor decking. Insulation supports shall be installed so spacing is no more than 24" on center. Cantilevered floor vents shall be placed below the lower surface of the floor insulation.

07300 ROOFING MATERIAL
Part 2 - Product
1. Shingles and roofing tiles:
A. See the "TYPICAL BUILDING MATERIALS" list on the drawings
2. Membrane roofing: A. 3-ply hot mopped.

Part 3 - Execution
1. Install per manufacturer's recommendation and Chapter 9 of the I.R.C.

07460 SIDING MATERIAL
Part 2 - Product
1. Siding: A. See the "TYPICAL BUILDING MATERIALS" list on the drawings.
2. Trim: A. See the "TYPICAL BUILDING MATERIALS" list on the drawings.
3. Soffits: A. See the "TYPICAL BUILDING MATERIALS" list on the drawings.
4. Other: A. See the "TYPICAL BUILDING MATERIALS" list on the drawings.

Part 3 - Execution
1. Install per manufacturer's recommendation and Chapter 7 of the I.R.C.

07600 FLASHING AND SHEET METAL
Part 2 - Product
1. Min. 26 Gauge galvanized, prefinished.

Part 3 - Execution
1. Install per Chapter 7 and 9 of the I.R.C.
A) Flashing against a vertical sidewall shall be by the step-flashing method. The flashing shall be a minimum of 4" high and 4" wide. At the end of the vertical sidewall the step flashing shall be turned out in a manner that directs water away from the wall and onto the roof and/or gutter, Per I.R.C. R903.2.1

07700 ROOFING SPECIALTIES
Part 2 - Product
1. Vents:
A. Ridge vent: manufactured by:
1. Coordinate with materials finish selection schedule (by others).
B. Mushroom vent: manufactured by:
1. Coordinate with materials finish selection schedule (by others).
2. Gutters:
A. Continuous alum. precoated:
1. Style: K profile
2. Color: Match fascia
3. Downspouts:
A. 2x3 rectangular aluminum precoated:
1. Color: Match fascia & trim
B. Tie to 1 drain system.

07800 SKYLIGHTS
Part 2 - Product
1. Skylights to conform with I.R.C. section R308.6.
2. Manufacturer: A. Coordinate with materials finish selection schedule (by others).

07900 SEALANTS AND CAULKING
Part 2 - Product
1. Caulking A. Styrene butadene caulking (SBR) 1. Color: Match siding

END DIVISION 7

Division 8
DOORS AND WINDOWS

08200 WOOD DOORS (Lower Level, Main Level, Upper Level)

Part 2 - Product
1. Panel wood doors: A. Coordinate with materials finish selection schedule (by others).
2. Flush wood doors: A. Coordinate with materials finish selection schedule (by others).
3. Stile and rail(store door): A. Coordinate w/materials finish selection schedule (by others).
4. Patio door: A. Coordinate with materials finish selection schedule (by others).
5. Other: A. Coordinate with materials finish selection schedule (by others).

08300 SPECIALTY DOORS
Part 2 - Product
1. Sliding glass door:
A. Coordinate with materials finish selection schedule (by others).
2. Garage door: (make/style): (see division 11450)
A. Coordinate with materials finish selection schedule (by others).

08600 WOOD/VINYL WINDOWS
Part 2 - Product
1. Note: Egress -
A. Every sleeping room shall have at least one operable window with a net clear opening of 5.7 s.f. The net clear opening height shall be a minimum of 24", with a minimum net clear width of 20", and a finished sill height of not more than 44" above the floor, per I.R.C. section R310.
B. Safety glaze per I.R.C. section R308.
C. See plans for egress and operation.
2. Manufactured by:
A. Color: 1. Coordinate with materials finish selection schedule (by others).
B. Style: 1. Coordinate with materials finish selection schedule (by others).

08700 HARDWARE
Part 2 - Product
1. Type: A. Coordinate with materials finish selection schedule (by others).
2. Weather Stripping: A. Coordinate with materials finish selection schedule (by others).
3. Thresholds: A. Coordinate with materials finish selection schedule (by others).

08800 GLAZING
Part 2 - Product
1. Glass thickness to be determined by size and wind loading per I.R.C. section R308.
2. Safety glaze per I.R.C. section R308.
3. Mirrors to be silvered 1/4" float plate glass.

END DIVISION 8

Division 9
FINISHES

09250 GYPSUM WALLBOARD
Part 2 - Product
1. Walls: See the "TYPICAL BUILDING MATERIALS" list on the drawings.
A. Finish: 1. Coordinate with Contractor/Owner material selections.
2. Ceiling: See the "TYPICAL BUILDING MATERIALS" list on the drawings.
A. Finish: 1. Coordinate with materials finish selection schedule.
3. Wall and ceiling finishes shall have a flame spread index of not greater than 200, and a smoke-developed index of not greater than 450 per I.R.C. R302.9.
4. Code required areas:
A. Type "X: GWB as required.
1. See division 01002 misc. assembly requirements.
B. Waterproof GWB as req'd at wet or damp locations per I.R.C. section R702.4.2.
5. Wonderboard or duroc at all tile locations (U.N.O.)
6. Metal corner bead profile:
1. Coordinate with materials finish selection schedule.

Part 3 - Execution
1. Apply as required in I.R.C. Chapter 7 and Table R702.1(3). Nail or screw in place per table.

09300 TILE
Part 2 - Product
1. Ceramic, quarry, and marble tiles:
A. Coordinate with materials finish selection schedule (by others).

Part 3 - Execution
1. Refer to manufacturer's recommendations.

09550 WOOD FLOORING
Part 2 - Products 1. Type:
A. Coordinate with materials finish selection schedule (by others).

09650 RESILIENT FLOORING
Part 2 - Products 1. Type:
A. Coordinate with materials finish selection schedule (by others).

09680 CARPETING
Part 2 - Products 1. Carpet and Pad:
A. Coordinate with materials finish selection schedule (by others).

09900 PAINTING
Part 2 - Products
1. Painting over prepared surface per manufacturer's recommendations
A. Coordinate with materials finish selection schedule (by others).

09950 WALL COVERINGS
Part 2 - Products
1. Type: A. Coordinate with materials finish selection schedule (by others).

END DIVISION 9

Division 10
SPECIALTIES

10200 LOUVERS AND VENTS
Part 2 - Products
1. Hardware cloth screen 1/4" x 1/4" on soffit vents as detailed.
2. Continuous 2" performed metal soffit vent as detailed.
3. Roof vent (See Division 07700)
4. Other vents as noted per plans.

10300 PREFABRICATED FIREPLACES
Part 2 - Products
1. Location/Model/Accessories:
A. Coordinate with materials finish selection schedule (by others).
Part 3 - Execution
1. See division 01002.12 for misc. assembly requirements for fireplaces.

10400 IDENTIFYING DEVICES
Part 2 - Products
1. Building numbers:
A. Coordinate with materials finish selection schedule (by others).
Part 3 - Execution
1. Install in location per jurisdictional requirements.

10800 TOILET AND BATH ACCESSORIES
Part 2 - Products
1. Toilet and bath accessories:
A. Coordinate with materials finish selection schedule (by others).

10900 WARDROBE AND CLOSET SPECIALTIES
Part 2 - Products
1. Storage Closet:
A. Coordinate with materials finish selection schedule (by others).
2. Clothes Closets:
A. Coordinate with materials finish selection schedule (by others).
3. Pantry.

END DIVISION 10

Division 11
EQUIPMENT

11010 MAINTENANCE EQUIPMENT
Part 2 - Products
1. Vacuum cleaning system:
A. Coordinate with materials finish selection schedule (by others).

11450 RESIDENTIAL EQUIPMENT
Part 2 - Products
1. Garage door opener(s).
A. Coordinate with materials finish selection schedule (by others).
2. Ironing board cabinet (or drawer).
A. Coordinate with materials finish selection schedule (by others).
3. Free-standing appliances:
A. Coordinate with materials finish selection schedule (by others).

END DIVISION 11

Division 12
FURNISHINGS

12500 WINDOW TREATMENT
Part 2 - Products
1. Window treatment: A. Coordinate with materials finish selection schedule (by others).

END DIVISION 12

Division 13
SPECIAL CONSTRUCTION

13150 POOLS
Part 2 - Products 1. Bidder design

13156 HOT TUB
Part 2 - Products
1. By:
A. Coordinate with materials finish selection schedule (by others).

END DIVISION 13

Division 14
CONVEYING SYSTEMS

14100 DUMBWAITER
Part 2 - Products
1. Dumbwaiter: A. Manufacturer/model number:
1. Coordinate with materials finish selection schedule (by others).

END DIVISION 14

Division 15
MECHANICAL

15000 GENERAL
Part 1 - General
1. Mechanical system to be bidder design.
2. Regulatory requirements:
A. Refer to Division 1 General Requirements.
B. See plans for total maximum Btu.
C. Heating and cooling equipment shall be sized based on building loads calculated in accordance with ACCA manual J or other approved heating and cooling calculation methodologies. Per M1401.3
3. Contractor work out plumbing and HVAC diagram layout.
A. Coordinate with other trades.

15400 PLUMBING
Part 2 - Product
1. Pipes and Fittings:
A. Waste & soil: ABS plastic of sizes req'd for the intended purpose.
1. Provide cast iron with compression neoprene joints per locations shown on the drawings.
2. Provide clean-outs at bends.
B. Vents: ABS
C. Gas: Per code, verify location of appliances.
1. Provide an approved earthquake shutoff valve installed in the building supply line immediately after the gas meter. The valve shall be located outside of the structure and be accessible.
D. Water Line:
1. Below Grade: 1 1/4" type K with/hard solder
2. Above Grade: Type L w/soft solder
2. Plumbing equipment:
A. Hot water heater: (Duals in tandem)
1. Size per U.P.C. 501 and Table 501.1(1) and jurisdictional amendments.
2. Coordinate with owner's material selection (by others).
B. Hose bib, frost proof type: Mansfield units
C. Main shut-off valve in garage.
D. Plumbing fixtures 1. Coordinate with owners material selection (by others).
3. Irrigation: (bidder design)
A. Provide "T" connection in main line in garage by main shut-off valve with separate shut-off and drain valve.

15400 PLUMBING (cont.)
4. Automatic Sprinkler System: (bidder design)

Part 3 - Execution
1. The installer to design the system to appropriate jurisdictional requirements and function in a manner consistent with industry standards. Refer to general requirements.

15500 HVAC
Part 2 - Product
1. Forced Air:
A. Furnace system:
1. Coordinate with materials finish selection schedule (by others).
B. Duct work and insulation:
1. Coordinate with materials finish selection schedule (by others).
C. Air cleaner:
1. Coordinate with materials finish selection schedule (by others).
D. Controls:
1. Coordinate with materials finish selection schedule (by others).
E. Registers with adjustable supply:
1. Coordinate with materials finish selection schedule (by others).
F. Provide firestopping at 'B' vent location per I.R.C. sections R302.11.
2. Fans: see division 17 energy requirements.
3. See floor plans for Whole House Ventilation requirements.
4. Vents:
1. Coordinate with materials finish selection schedule (by others).
5. Exhaust Ducts:
A. Terminate outside building and equip with backdraft dampers per I.R.C. section M1504.
6. Dryer Ducts:
A. Cloths Dryers shall be exhausted in accordance with manufactures instructions & I.R.C. M1502.
B. Protective shield plates shall be placed per I.R.C. M1502.5.

Part 3 - Execution
1. The installer to design the system to appropriate jurisdictional requirements and function in a manner consistent with industry standards. Refer to general requirements.

END DIVISION 15

Division 16
ELECTRICAL

16000 GENERAL
Part 1 - General
1. Electrical systems to be bidder designed.
2. Regulatory requirements: refer to Division 1 - General Requirements.
3. Contractor to provide electrical diagramming layouts, design circuitry: follow lighting plan if provided.
A. Coordinate with other trades.

16200 POWER
Part 2 - Product
1. Wire and Boxes.
A. Volt: 12 6A (3) Wire
1. GFI @ Damp Locations
B. Low voltage: standard type
2. Panels: Circuit breaker box fully labeled
A. Capacity: Bidder Design
B. Circuitry: Bidder Design
3. Grounding:
A. Provide (1) 2 1/2" schedule 80 PVC conduit at concrete stem wall for electrical service and (1) 5/8" diameter x 8'0" long galvanized rod (& Ufer ground) for electrical grounding.
4. Smoke Detectors:
A. Provide and install per I.R.C. section R314.
5. Fire alarm:
A. Provide and install per N.E.C. and as required by governing fire marshal.

Part 3 - Execution
1. The installer to design the system to appropriate jurisdictional requirements and function in a manner consistent with the industry standards. Refer to general requirements and I.R.C.

16200 COMMUNICATIONS
Part 2 - Product
1. Intrusion alarm and security detection systems:
A. Coordinate with materials finish selection schedule (by others).
2. Phone system:
A. Coordinate with materials finish selection schedule (by others).
3. Intercommunication systems:
A. Coordinate with materials finish selection schedule (by others).
4. Stereo system:
A. Coordinate with materials finish selection schedule (by others).

16500
LIGHTING

Part 2 - Product
1. Fixtures: 1. Coordinate with materials finish selection schedule (by others).
Note: A minimum of 90% of all luminaries shall be high efficiency per W.S.E.C. R404.1.
2. Control: A. Switches:1. Coordinate with materials finish selection schedule.
3. Dimmers: 1. Coordinate with materials finish selection schedule (by others).
4. Boxes: 1. Coordinate with materials finish selection schedule (by others).
5. Other: 1. Coordinate with materials finish selection schedule (by others).

Part 3 - Execution
1. The installer to design the system to appropriate jurisdictional requirements and function in a manner consistent with the industry standards. Refer to general requirements.

END DIVISION 16

Division 17
ENERGY REQUIREMENTS

WASHINGTON STATE ENERGY CODE:
General Notes:
1. Per WSEC R402.4. The building Envelope shall be constructed to limit the air leakage rate not to exceed 5 air changes per hour. The results of the test shall be signed by the party conducting the test and provided to the code official (R402.4.1.2).
2. Per WSEC R403.1.1. at least one thermostat per dwelling unit shall be capable of controlling the heating and cooling system on a daily schedule.
3. Per WSEC R403.3.2. ducts, air handlers, and filter boxes shall be sealed.

5879
JOHN KAPPLER
ORIGINAL SIGNATURE REQUIRED

Date	By	Description
9/4/24	AG	PERMIT SET

Lee Remodel

8448 N Mercer Way, Mercer Island, WA

ARCHITECTURAL INNOVATIONS, P.S.
Forward Thinking Design Solutions For Your Environment
14311 SE 16th St
Bellevue, WA 98007
1-800-888-4517
www.kapplerhomeplans.com

TITLE

JOB NO. : 23050.05
STARTING NO. : 23050.03

SHEET
A1

BUILDING HEIGHT CALCULATION

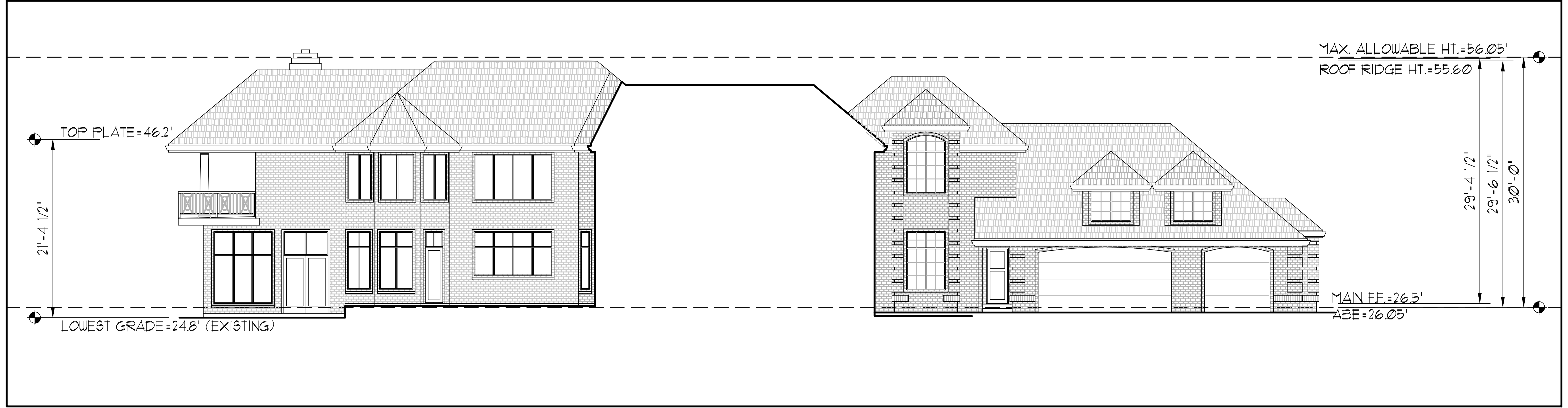
MAX. ALLOWABLE HT.=56.05'
ROOF RIDGE HT.=55.60'
TOP PLATE=46.2'
21'-4 1/2"
29'-4 1/2"
29'-6 1/2"
30'-0"
MAIN F.F.=26.5'
ABE=26.05'
LOWEST GRADE=24.8' (EXISTING)

LOT SLOPE CALCULATION

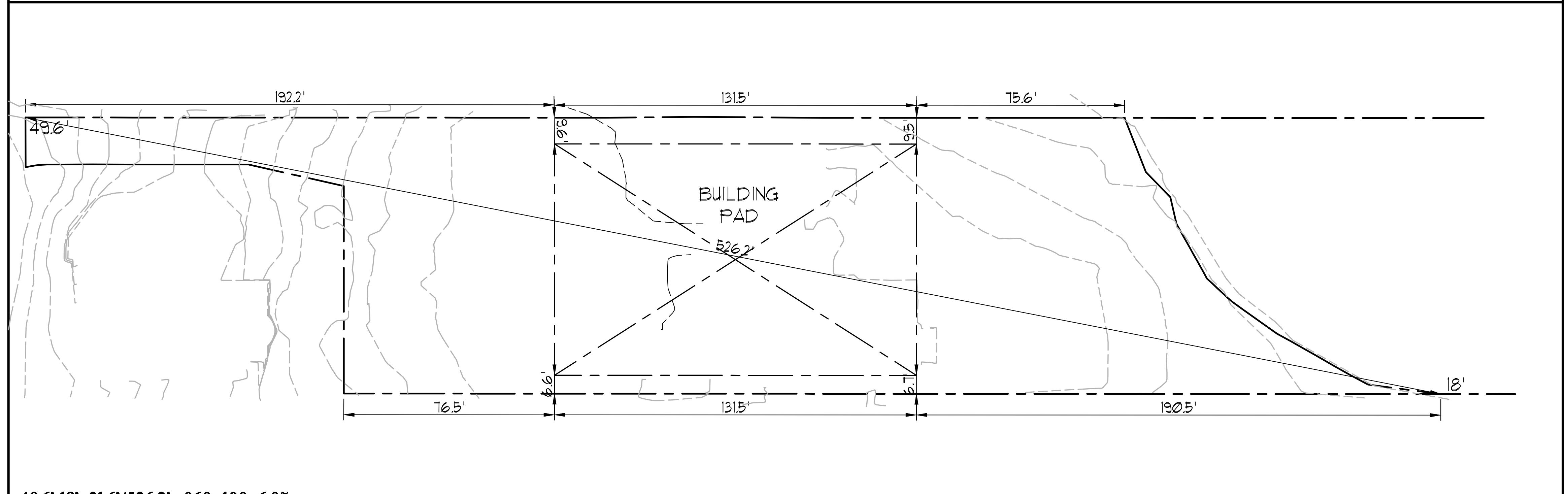
192.2'
131.5'
75.6'
49.6'
BUILDING PAD
526.2'
18'
76.5'
131.5'
190.5'
N.T.S.

49.6'-18'=31.6'/526.2'=.060x100=6.0%

City of Mercer Island Avg. Grade Calculations

Midpoint Datum Elevation			F or E	Wall Segment Length					
A	=	27.25	E	a	=	15.25	A*a	=	415.56
B	=	27.20	E	b	=	12.31	B*b	=	334.83
C	=	26.66	E	c	=	58.47	C*c	=	1558.81
D	=	26.57	E	d	=	7.31	D*d	=	194.23
E	=	26.57	E	e	=	2.00	E*e	=	53.14
F	=	26.57	E	f	=	8.23	F*f	=	218.67
G	=	26.50	E	g	=	2.00	G*g	=	53.00
H	=	26.50	E	h	=	7.39	H*h	=	195.84
I	=	26.50	E	i	=	39.40	I*i	=	1044.10
J	=	27.43	E	j	=	5.17	J*j	=	141.81
K	=	25.90	E	k	=	2.69	K*k	=	69.67
L	=	26.00	E	l	=	6.50	L*l	=	169.00
M	=	26.00	E	m	=	2.69	M*m	=	69.94
N	=	25.90	E	n	=	7.75	N*n	=	200.73
O	=	25.90	E	o	=	1.81	O*o	=	46.88
P	=	25.90	E	p	=	15.86	P*p	=	410.77
Q	=	25.80	E	q	=	4.91	Q*q	=	126.68
R	=	25.80	E	r	=	3.91	R*r	=	100.88
S	=	27.43	E	s	=	18.39	S*s	=	504.44
T	=	26.50	E	t	=	10.82	T*t	=	286.73
U	=	27.43	E	u	=	18.39	U*u	=	504.44
V	=	25.60	E	v	=	3.91	U*u	=	100.10
W	=	25.60	E	w	=	7.00	W*w	=	179.20
X	=	25.60	E	x	=	5.50	X*x	=	140.80
Y	=	25.70	E	y	=	19.50	Y*y	=	501.15
Z	=	25.90	E	z	=	5.75	Z*z	=	148.93
a	=	26.00	E	A	=	1.40	a*A	=	36.40
b	=	26.20	E	B	=	7.75	b*B	=	203.05
c	=	26.21	E	C	=	1.40	c*C	=	36.69
d	=	26.21	E	D	=	5.75	d*D	=	150.71
e	=	24.60	E	E	=	71.00	e*E	=	1746.60
f	=	25.80	E	F	=	24.91	f*F	=	642.68
g	=	26.17	E	G	=	7.91	g*G	=	207.00
h	=	26.20	E	H	=	20.00	h*H	=	524.00
i	=	26.60	E	I	=	5.00	i*I	=	133.00
j	=	26.70	E	J	=	13.00	j*J	=	347.10
k	=	26.70	E	K	=	2.91	k*K	=	77.70
l	=	26.80	E	L	=	15.18	l*L	=	406.82
m	=	26.80	E	M	=	4.91	m*M	=	131.59
n	=	26.10	E	N	=	5.50	n*N	=	143.55
o	=	26.10	E	O	=	4.91	o*O	=	128.15
p	=	26.36	E	P	=	5.00	p*P	=	131.80
q	=	26.31	E	Q	=	20.00	q*Q	=	526.20
r	=	26.36	E	R	=	19.75	r*R	=	520.61
s	=	24.57	E	S	=	2.91	s*S	=	71.50
t	=	24.61	E	T	=	3.91	t*T	=	96.23
u	=	24.54	E	U	=	15.91	u*U	=	390.43
v	=	24.20	E	V	=	3.91	v*V	=	94.62
w	=	24.90	E	W	=	43.00	w*W	=	1070.70
x	=	27.16	E	X	=	12.31	x*X	=	334.34
		1306.91				**611.14**			**15921.78**
Address	**8448 N Mercer Way, Mercer Island, WA**						**26.05**		***AVG. GRADE***

LEGEND

- - - - - -	DESIGNATES EXISTING GRADE
———	DESIGNATES FINISHED GRADE
- - - - - -	DESIGNATES TREE DRIPLINE
—x—x—x—	DESIGNATES TREE FENCING
—□—□—□—	DESIGNATES EXISTING WOOD FENCE

ALL EXISTING TREES TO BE RETAINED

VICINITY MAP

SITE
N Mercer Way
Mountains to Sound Greenway Trl
N Mercer Way

SITE INFO

STREET ADDRESSES:
8448 N MERCER WAY, MERCER ISLAND, WA 98040

PARCEL #:
8106100030

LEGAL DESCRIPTION:
SUNNYBANK ADD LOT B - TGW SH LDS ADJ MERCER ISLAND SHORT PLAT NO MI 91-03-04 REC NO 9112119006 SD SHORT PLAT DAF - TRACT 3 OF SUNNYBANK ADDITION - LESS ST HWY

ZONING

ZONING: R-15

SINGLE FAMILY RESIDENTIAL SETBACKS.
FRONT YARD - 20'-0"
REAR YARD - 25'-0" (OHWM)
TOTAL SIDE YARD(S) - 17% OF 100' LOT WIDTH - 17'-0"

HEIGHT LIMIT
30' ABOVE AVERAGE BUILDING ELEVATION
35' DOWNHILL HIGHEST PLATE FROM EXISTING GRADE

LOT COVERAGE
SLOPE IS 6% - 40% MAX OF GROSS LOT AREA

HARDSCAPE
SLOPE IS 6% - 9% MAX OF GROSS LOT AREA

G.F.A.
40% MAX. OF NET LOT AREA

SITE CALCULATIONS

LOT AREA
33,200 SF GROSS LOT AREA

LOT COVERAGE STRUCTURE CALCULATION
33,200 SF GROSS LOT AREA
x 40%
13,280 SF ALLOWABLE LOT STRUCTURE COVERAGE

	EXISTING	ADDITION	PROPOSED
BUILDING (ROOF AREA)	6,680 SF	185 SF	6,865 SF
BRICK WALL	36 SF	0	36 SF
BLOCK WALL	23 SF	0	23 SF
SHED	43 SF	0	43 SF
DRIVEWAY	5,619 SF	0	5,619 SF
TOTAL LOT COVERAGE	12,401 SF/37.3%		12,586 SF/37.9%

HARDSCAPE CALCULATION
33,200 SF GROSS LOT AREA
x 9%
2,988 SF ALLOWABLE HARDSCAPE COVERAGE

	EXISTING	ADDITION	PROPOSED
50'+ AREA - 9%			
SIDEWALKS (excl. u/eaves)	668 SF	0	668 SF
ROCKERY	188 SF	0	188 SF
POOL AREA	2,547 SF	-64 SF	2,483 SF
PATIO (excl. u/eaves)	1,023 SF	0	1,023 SF
RET. WALL	161 SF	0	161 SF
AC	18 SF	0	18 SF
COURTYARD (excl. u/eaves)	317 SF	-121 SF	196 SF
TOTAL HARDSCAPE	4,922 SF/14.8%		4,737 SF/14.2%
25' - 50' AREA - 30% HARDSCAPE			
SIDEWALKS (excl. u/eaves)	165 SF	0	165 SF
ROCKERY	5 SF	0	5 SF
POOL AREA	221 SF	0	221 SF
TOTAL HARDSCAPE	391 SF/1.17%		391 SF/1.17%
0 - 25' AREA - 10% HARDSCAPE			
SIDEWALKS (excl. u/eaves)	475 SF	0	475 SF
ROCKERY	502 SF	0	502 SF
RET. WALL	7 SF	0 SF	7 SF
TOTAL HARDSCAPE	984 SF/2.96%		984 SF/2.96%

G.F.A. CALCULATION
33,200 SF NET LOT AREA
x 40%
13,280 SF

	EXISTING	ADDITION	PROPOSED
UPPER FLOOR	530 SF	+1,821 SF	2,351 SF
MAIN FLOOR	4,830 SF	+142 SF	4,972 SF
GARAGE	820 SF	0	820 SF
SHED	43 SF	0	43 SF
DECK	0	+176 SF	176 SF
TOTAL G.F.A.	6,223 SF/18.7%		8,362 SF/25.1%

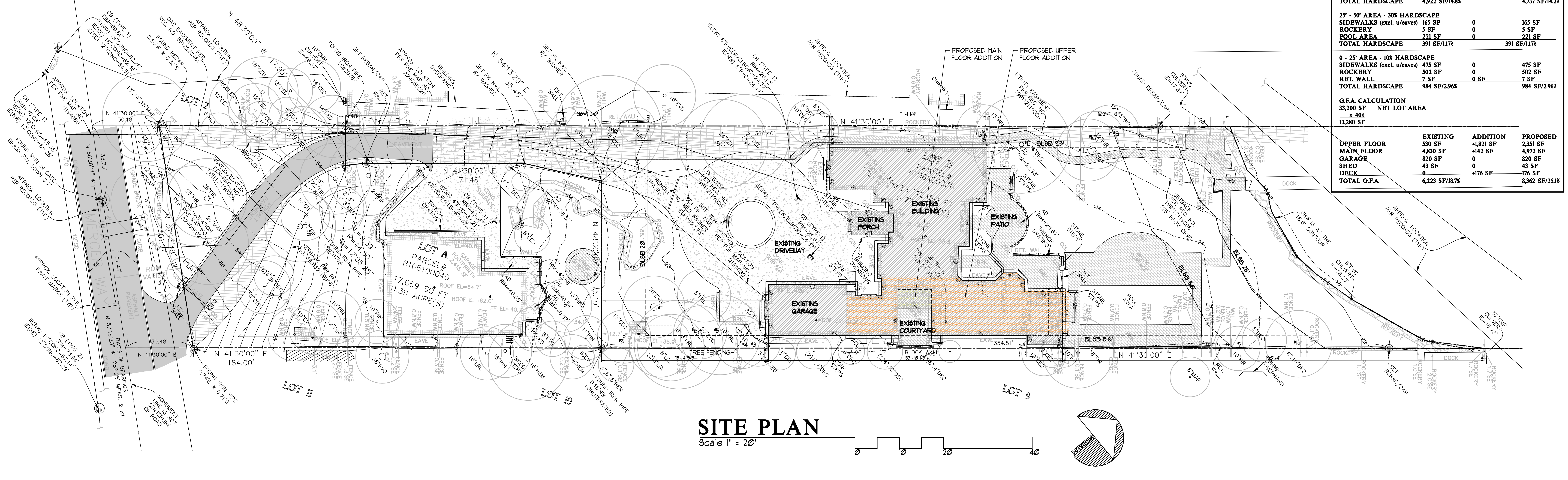
LOT B
PARCEL# 8106100030
LOT A
PARCEL# 8106100040
17,069 SQ FT
0.39 ACRE(S)
LOT 2
LOT 11
LOT 10
LOT 9
EXISTING PORCH
EXISTING BUILDING
EXISTING PATIO
EXISTING DRIVEWAY
EXISTING GARAGE
EXISTING COURTYARD
PROPOSED MAIN FLOOR ADDITION
PROPOSED UPPER FLOOR ADDITION
N 41°30'00" E
N 48°30'00" W
N 54°13'20" E
BLSB 33'
BLSB 25'
BLSB 5'
BLSB 56'
OHW IS AT THE 18.6' CONTOUR
APPROX. LOCATION PER RECORDS (TYP)
MERCER WAY
DOCK
TREE FENCING
0
10
20
40

SITE PLAN

Scale 1" = 20'

REGISTERED ARCHITECT
5679
JOHN KAPPLER
STATE OF WASHINGTON
ORIGINAL SIGNATURE REQUIRED

Date	By	Description
9/4/24	AG	PERMIT SET

Lee Remodel

8448 N Mercer Way, Mercer Island, WA

ARCHITECTURAL INNOVATIONS, P.S.
Forward Thinking Design Solutions For Your Environment
14311 SE 16th St
Bellevue, WA 98007
1-800-888-4517
www.kapplerhomeplans.com

TITLE

JOB NO. : 23050.14
STARTING NO. : NA

SHEET

A1.1

TOPOGRAPHIC & BOUNDARY SURVEY

LEGAL DESCRIPTION

(PER STATUTORY WARRANTY DEED RECORDING NO. 20031105001939)

LOTS A AND B, CITY OF MERCER ISLAND SHORT PLAT NUMBER M I 91–03–04, RECORDED UNDER RECORDING NUMBER 9112119006, IN KING COUNTY, WASHINGTON.

BASIS OF BEARINGS

ACCEPTED THE BEARING OF N 57°16'20" W BETWEEN MONUMENTS FOUND ALONG THE CENTERLINE OF N MERCER WAY, PER REFERENCE NO. 1.

REFERENCES

R1. MERCER ISLAND SHORT PLAT NO. M.I. 91–03–04, VOL. 84, PGS. 143–145, RECORDS OF KING COUNTY, WASHINGTON.

VERTICAL DATUM

NAVD 88 PER GPS OBSERVATIONS

SITE TEMP. BENCHMARK
DESCRIPTION: PK NAIL W/ RED WASHER
LOCATION: 31.1'N & 50.8'E FROM THE NORTHMOST COR OF LOT A
ELEVATION: 27.75'

SURVEYOR'S NOTES

1. THE TOPOGRAPHIC SURVEY SHOWN HEREON WAS PERFORMED IN JULY OF 2024. THE FIELD DATA WAS COLLECTED AND RECORDED ON MAGNETIC MEDIA THROUGH AN ELECTRONIC THEODOLITE. THE DATA FILE IS ARCHIVED ON DISC OR CD. WRITTEN FIELD NOTES MAY NOT EXIST. CONTOURS ARE SHOWN FOR CONVENIENCE ONLY. DESIGN SHOULD RELY ON SPOT ELEVATIONS.
2. ALL MONUMENTS SHOWN HEREON WERE LOCATED DURING THE COURSE OF THIS SURVEY UNLESS OTHERWISE NOTED.
3. THE TYPES AND LOCATIONS OF ANY UTILITIES SHOWN ON THIS DRAWING ARE BASED ON INFORMATION PROVIDED TO US, BY OTHERS OR GENERAL INFORMATION READILY AVAILABLE IN THE PUBLIC DOMAIN INCLUDING, AS APPLICABLE, IDENTIFYING MARKINGS PLACED BY UTILITY LOCATE SERVICES AND OBSERVED BY TERRANE IN THE FIELD. AS SUCH, THE UTILITY INFORMATION SHOWN ON THESE DRAWINGS ARE FOR INFORMATIONAL PURPOSES ONLY AND SHOULD NOT BE RELIED ON FOR DESIGN OR CONSTRUCTION PURPOSES; TERRANE IS NOT RESPONSIBLE OR LIABLE FOR THE ACCURACY OR COMPLETENESS OF THIS UTILITY INFORMATION. FOR THE ACCURATE LOCATION AND TYPE OF UTILITIES NECESSARY FOR DESIGN AND CONSTRUCTION, PLEASE CONTACT THE SITE OWNER AND THE LOCAL UTILITY LOCATE SERVICE (800–424–5555).
4. SUBJECT PROPERTY TAX PARCEL NOS. 8106100030 & 8106100040
5. SUBJECT PROPERTY AREA PER THIS SURVEY IS 50,781 S.F. (1.17 ACRES)
6. THIS SURVEY WAS PERFORMED WITHOUT THE BENEFIT OF A TITLE REPORT. EASEMENTS AND OTHER ENCUMBRANCES MAY EXIST THAT ARE NOT SHOWN HEREON.
7. EXISTING STRUCTURE(S) LOCATION AND DIMENSIONS ARE MEASURED FROM THE FACE OF THE SIDING UNLESS OTHERWISE NOTED.
8. FIELD DATA FOR THIS SURVEY WAS OBTAINED BY DIRECT FIELD MEASUREMENTS WITH A CALIBRATED ELECTRONIC 3–SECOND TOTAL STATION AND/OR SURVEY GRADE GPS OBSERVATIONS. ALL ANGULAR AND LINEAR RELATIONSHIPS ARE ACCURATE AND MEET THE STANDARDS SET BY WAC 332–130–090.

LEGEND

⊡	AREA DRAIN	PV	POWER VAULT
▭	ASPHALT SURFACE	━	PROPERTY LINE (SUBJECT)
⊕	BENCHMARK	●	REBAR & CAP (SET)
▦	BRICK SURFACE	○	REBAR AS NOTED (FOUND)
▨	BUILDING	▨	RETAINING WALL
─	CENTERLINE ROW	─	RIGHT–OF–WAY LINES
CO ○	CLEANOUT		ROCKERY
▭	CONCRETE SURFACE	─	SEWER LINE
›	CULVERT PIPE	─	STORM DRAIN LINE
▨	DECK	SIZE TYPE ○	TREE (AS NOTED)
─×─×─	FENCE LINE (CHAIN LINK)	─	WATER LINE
─▫─	FENCE LINE (WOOD)	WM ☐	WATER METER
	FIRE HYDRANT	WV ⋈	WATER VALVE
─	GAS LINE	▨	INGRESS/EGRESS EASEMENT REC. NO. 199112119006
G ☐	GAS METER	▨	GAS EASEMENT REC. NO. 8912220466
	GUY ANCHOR	▨	UTILITY EASEMENT REC. NO. 199112119006
☐	INLET (TYPE 1)		
MB	MAILBOX (RESIDENTIAL)		
	MONUMENT (IN CASE, FOUND)		
	NAIL AS NOTED	ACU	AIR CONDITION UNIT
PST ☐	POST	CONC	CONCRETE
P ☐	POWER METER	COR	CORNER
─	POWER (OVERHEAD)	DEC	DECIDUOUS
─	POWER (UNDERGROUND)	EVG	EVERGREEN
PP ○	POWER POLE	FF	FINISH FLOOR
PWR SENTRY ☐	POWER SENTRY	MON	MONUMENT
PT	POWER TRANSFORMER	PROP	PROPERTY

VICINITY MAP

N.T.S.

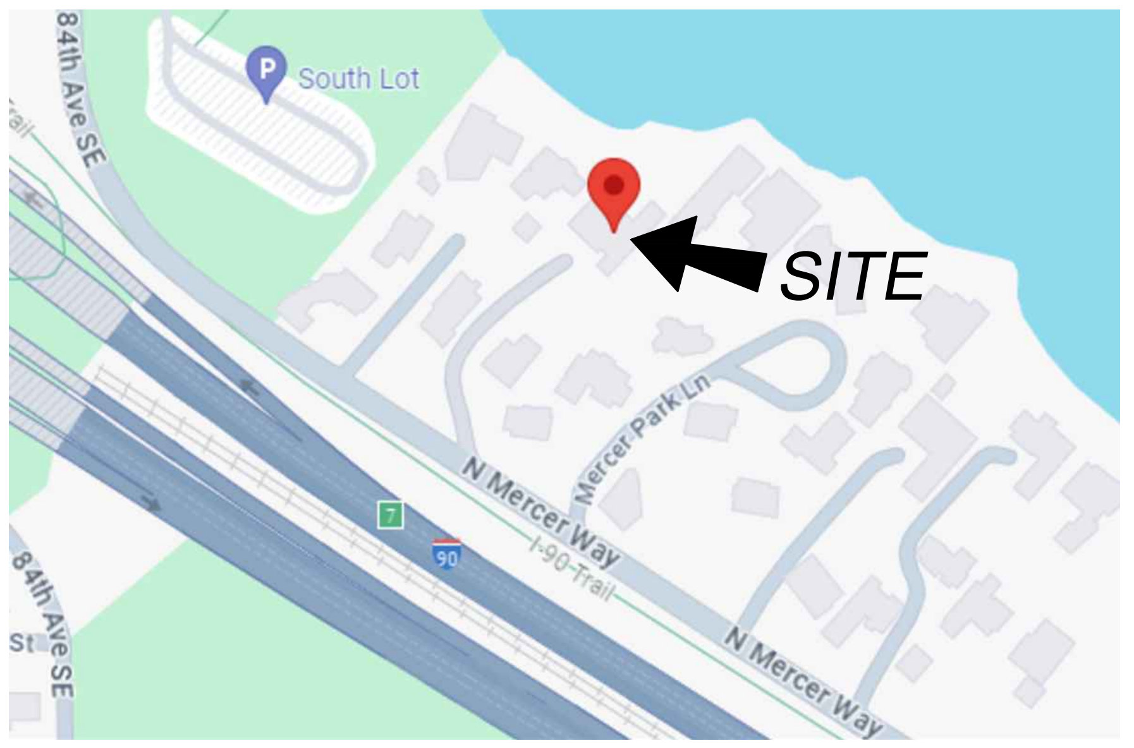
84th Ave SE
South Lot
SITE
Mercer Park Ln
N Mercer Way
I-90 Trail
N Mercer Way
84th Ave SE

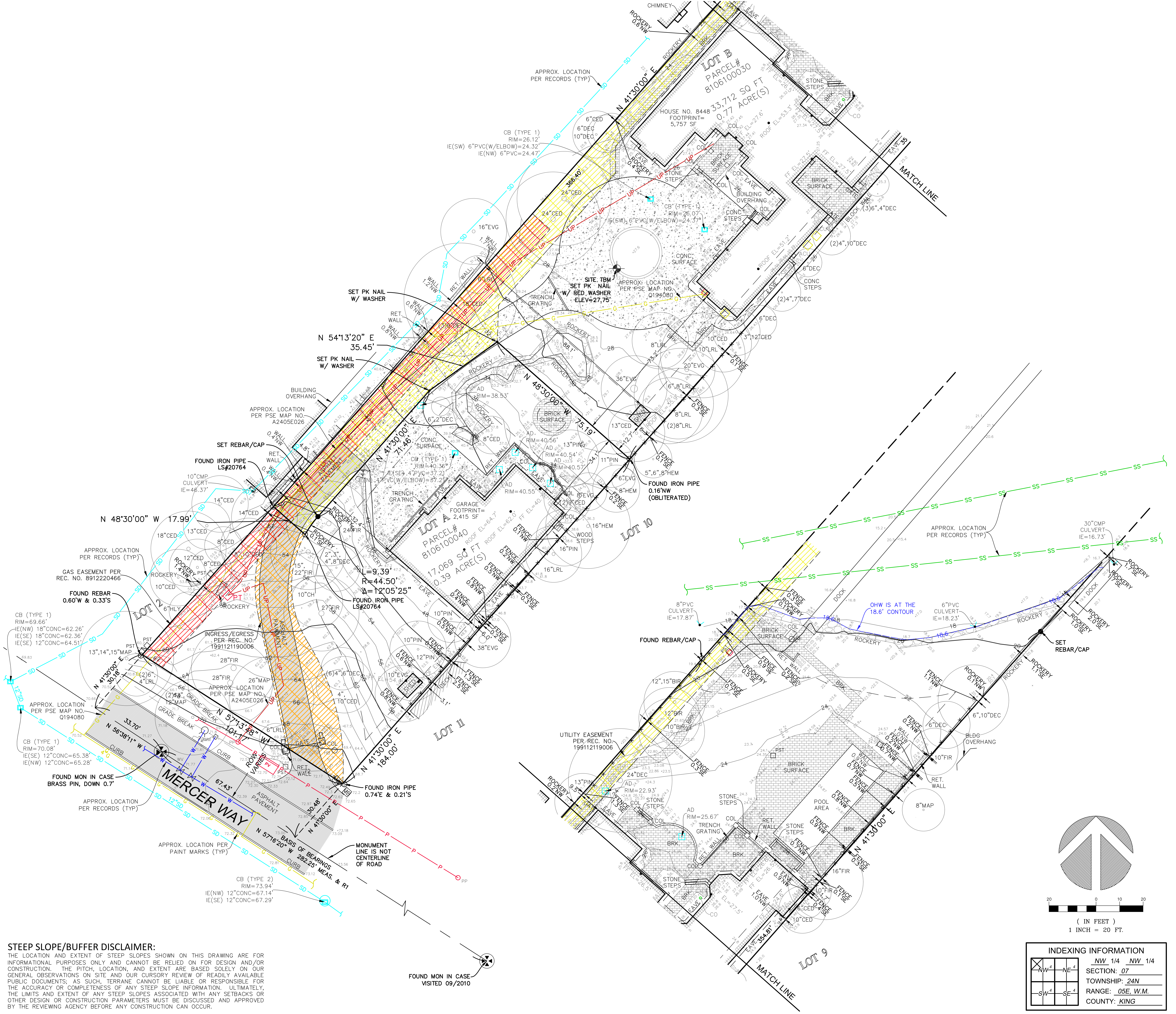
CHIMNEY
ROCKERY
LOT B
PARCEL# 8106100030
33,712 SQ FT
0.77 ACRE(S)
HOUSE NO. 8448
FOOTPRINT= 5,757 SF
APPROX. LOCATION PER RECORDS (TYP)
CB (TYPE 1)
RIM=26.12'
IE(SW) 6"PVC(W/ELBOW)=24.32'
IE(NW) 6"PVC=24.47'
N 41°30'00" E
366.40'
STONE STEPS
BUILDING OVERHANG
CONC. STEPS
BRICK SURFACE
MATCH LINE
CB (TYPE 1)
RIM=26.07'
CONC. SURFACE
SITE TBM
SET PK NAIL W/ RED WASHER
ELEV=27.75'
APPROX. LOCATION PER PSE MAP NO. Q194080
TRENCH GRATING
SET PK NAIL W/ WASHER
N 54°13'20" E
35.45'
SET PK NAIL W/ WASHER
BUILDING OVERHANG
APPROX. LOCATION PER PSE MAP NO. A2405E026
SET REBAR/CAP
FOUND IRON PIPE LS#20764
N 41°30'00" E
71.46'
N 48°30'00" W
75.19'
BRICK SURFACE
CB (TYPE 1)
RIM=40.36'
FOUND IRON PIPE
0.16'NW
(OBLITERATED)
LOT 10
LOT A
PARCEL# 8106100040
17,069 SQ FT
0.39 ACRE(S)
GARAGE FOOTPRINT= 2,415 SF
WOOD STEPS
N 48°30'00" W 17.99'
APPROX. LOCATION PER RECORDS (TYP)
GAS EASEMENT PER REC. NO. 8912220466
FOUND REBAR
0.60'W & 0.33'S
L=9.39'
R=44.50'
Δ=12°05'25"
FOUND IRON PIPE LS#20764
LOT 2
CB (TYPE 1)
RIM=69.66'
IE(NW) 18"CONC=62.26'
IE(SE) 18"CONC=62.36'
IE(SE) 12"CONC=64.51'
INGRESS/EGRESS EASEMENT PER REC. NO. 199112119006
ASPHALT PAVEMENT
APPROX. LOCATION PER PSE MAP NO. A2405E026
APPROX. LOCATION PER PSE MAP NO. Q194080
N 41°30'00" E
30.18'
33.70'
N 56°38'11" W
CB (TYPE 1)
RIM=70.08'
IE(SE) 12"CONC=65.38'
IE(NW) 12"CONC=65.28'
FOUND MON IN CASE
BRASS PIN, DOWN 0.7'
APPROX. LOCATION PER RECORDS (TYP)
MERCER WAY
N 57°13'48" W
101.17'
67.43'
GRADE BREAK
ROW VARIES
ASPHALT PAVEMENT
30.48'
N 41°30'00" E
184.00'
FOUND IRON PIPE
0.74'E & 0.21'S
LOT 11
N 57°16'20" W
BASIS OF BEARINGS
282.25' MEAS. & R1
MONUMENT LINE IS NOT CENTERLINE OF ROAD
APPROX. LOCATION PER PAINT MARKS (TYP)
CB (TYPE 2)
RIM=73.94'
IE(NW) 12"CONC=67.14'
IE(SE) 12"CONC=67.29'
FOUND MON IN CASE
VISITED 09/2010
APPROX. LOCATION PER RECORDS (TYP)
30"CMP CULVERT
IE=16.73'
8"PVC CULVERT
IE=17.87'
OHW IS AT THE 18.6' CONTOUR
6"PVC CULVERT
IE=18.23'
DOCK
FOUND REBAR/CAP
SET REBAR/CAP
BRICK SURFACE
UTILITY EASEMENT PER REC. NO. 199112119006
BLDG OVERHANG
RET. WALL
TRENCH GRATING
AD RIM=22.93'
AD RIM=25.67'
STONE STEPS
POOL AREA
BRICK SURFACE
N 41°30'00" E
354.81'
LOT 9
MATCH LINE
20 0 10 20
(IN FEET)
1 INCH = 20 FT.

STEEP SLOPE/BUFFER DISCLAIMER:

THE LOCATION AND EXTENT OF STEEP SLOPES SHOWN ON THIS DRAWING ARE FOR INFORMATIONAL PURPOSES ONLY AND CANNOT BE RELIED ON FOR DESIGN AND/OR CONSTRUCTION. THE PITCH, LOCATION, AND EXTENT ARE BASED SOLELY ON OUR GENERAL OBSERVATIONS ON SITE AND OUR CURSORY REVIEW OF READILY AVAILABLE PUBLIC DOCUMENTS; AS SUCH, TERRANE CANNOT BE LIABLE OR RESPONSIBLE FOR THE ACCURACY OR COMPLETENESS OF ANY STEEP SLOPE INFORMATION. ULTIMATELY, THE LIMITS AND EXTENT OF ANY STEEP SLOPES ASSOCIATED WITH ANY SETBACKS OR OTHER DESIGN OR CONSTRUCTION PARAMETERS MUST BE DISCUSSED AND APPROVED BY THE REVIEWING AGENCY BEFORE ANY CONSTRUCTION CAN OCCUR.

INDEXING INFORMATION

☒ NW ☐ NE ☐ SW ☐ SE

NW 1/4 NW 1/4
SECTION: 07
TOWNSHIP: 24N
RANGE: 05E, W.M.
COUNTY: KING

We are the measure | terrane.net

TOPOGRAPHIC & BOUNDARY SURVEY
PARCEL NOS. 8106100030 & 8106100040

ARCHITECTURAL INNOVATIONS

8448 NORTH MERCER WAY
MERCER ISLAND, WA 98040

JACOB GOODMAN MILLER
56654
Jacob G. Miller
08/01/24

TERRANE
11235 SE 6th St, Suite 130
Bellevue, WA 98004
p: 425-458-4488 | e: info@terrane.net

JOB NUMBER:	240974
DATE:	08/01/24
DRAFTED BY:	AJU
CHECKED BY:	JJS/JGM
SCALE:	1" = 20'

REVISION HISTORY

SHEET NUMBER
1 OF 1

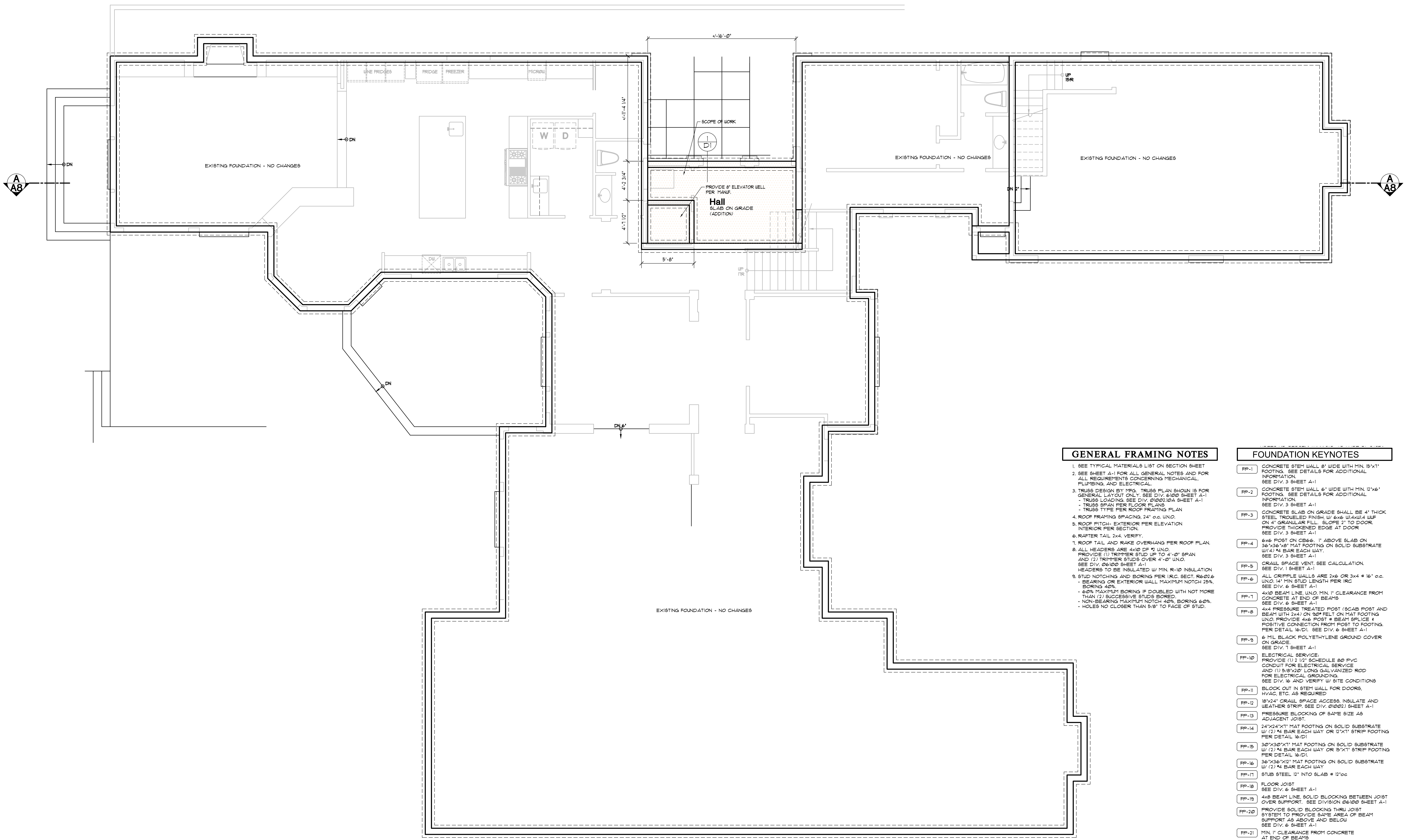
EXISTING FOUNDATION - NO CHANGES
WINE FRIDGES
FRIDGE
FREEZER
MICROW.
W
D
DW
DN
DN
DN
DN 6'
DN 2'
UP 15R
UP 17R
+/-16'-0"
+/-11'-4 1/4"
4'-2 3/4"
4'-7 1/2"
5'-8"
SCOPE OF WORK
1 D1
PROVIDE 8" ELEVATOR WELL PER MANUF.
Hall
SLAB ON GRADE (ADDITION)
EXISTING FOUNDATION - NO CHANGES
EXISTING FOUNDATION - NO CHANGES
EXISTING FOUNDATION - NO CHANGES
A A8
A A8

ARCHITECTURAL FOUNDATION PLAN

SCALE 1/4"=1'-0"

GENERAL FRAMING NOTES

1. SEE TYPICAL MATERIALS LIST ON SECTION SHEET
2. SEE SHEET A-1 FOR ALL GENERAL NOTES AND FOR ALL REQUIREMENTS CONCERNING MECHANICAL, PLUMBING, AND ELECTRICAL.
3. TRUSS DESIGN BY MFG. TRUSS PLAN SHOWN IS FOR GENERAL LAYOUT ONLY. SEE DIV. 6100 SHEET A-1
   - TRUSS LOADING. SEE DIV. 01002.10A SHEET A-1
   - TRUSS SPAN PER FLOOR PLANS
   - TRUSS TYPE PER ROOF FRAMING PLAN
4. ROOF FRAMING SPACING, 24" o.c. U.N.O.
5. ROOF PITCH- EXTERIOR PER ELEVATION INTERIOR PER SECTION.
6. RAFTER TAIL 2x4. VERIFY.
7. ROOF TAIL AND RAKE OVERHANG PER ROOF PLAN.
8. ALL HEADERS ARE 4x10 DF #2 U.N.O.
   PROVIDE (1) TRIMMER STUD UP TO 4'-0" SPAN AND (2) TRIMMER STUDS OVER 4'-0" U.N.O.
   SEE DIV. 06100 SHEET A-1
   HEADERS TO BE INSULATED W/ MIN. R-10 INSULATION
9. STUD NOTCHING AND BORING PER I.R.C. SECT. R602.6
   - BEARING OR EXTERIOR WALL MAXIMUM NOTCH 25%, BORING 40%.
   - 60% MAXIMUM BORING IF DOUBLED WITH NOT MORE THAN (2) SUCCESSIVE STUDS BORED.
   - NON-BEARING MAXIMUM NOTCH 40%, BORING 60%.
   - HOLES NO CLOSER THAN 5/8" TO FACE OF STUD.

FOUNDATION KEYNOTES

FP-1	CONCRETE STEM WALL 8" WIDE WITH MIN. 15"x7" FOOTING. SEE DETAILS FOR ADDITIONAL INFORMATION. SEE DIV. 3 SHEET A-1
FP-2	CONCRETE STEM WALL 6" WIDE WITH MIN. 12"x6" FOOTING. SEE DETAILS FOR ADDITIONAL INFORMATION. SEE DIV. 3 SHEET A-1
FP-3	CONCRETE SLAB ON GRADE SHALL BE 4" THICK STEEL TROWELED FINISH, W/ 6x6 W1.4xW1.4 WWF ON 4" GRANULAR FILL. SLOPE 2" TO DOOR. PROVIDE THICKENED EDGE AT DOOR SEE DIV. 3 SHEET A-1
FP-4	6x6 POST ON CB66. 1" ABOVE SLAB ON 36"x36"x8" MAT FOOTING ON SOLID SUBSTRATE W/(4) #4 BAR EACH WAY. SEE DIV. 3 SHEET A-1
FP-5	CRAWL SPACE VENT. SEE CALCULATION. SEE DIV. 1 SHEET A-1
FP-6	ALL CRIPPLE WALLS ARE 2x6 OR 3x4 @ 16" o.c. U.N.O. 14" MIN STUD LENGTH PER IRC SEE DIV. 6 SHEET A-1
FP-7	4x10 BEAM LINE, U.N.O. MIN. 1" CLEARANCE FROM CONCRETE AT END OF BEAMS SEE DIV. 6 SHEET A-1
FP-8	4x4 PRESSURE TREATED POST (SCAB POST AND BEAM WITH 2x4) ON 90# FELT ON MAT FOOTING U.N.O. PROVIDE 4x6 POST @ BEAM SPLICE & POSITIVE CONNECTION FROM POST TO FOOTING. PER DETAIL 16/D1. SEE DIV. 6 SHEET A-1
FP-9	6 MIL BLACK POLYETHYLENE GROUND COVER ON GRADE. SEE DIV. 7 SHEET A-1
FP-10	ELECTRICAL SERVICE: PROVIDE (1) 2 1/2" SCHEDULE 80 PVC CONDUIT FOR ELECTRICAL SERVICE AND (1) 5/8"x20' LONG GALVANIZED ROD FOR ELECTRICAL GROUNDING. SEE DIV. 16 AND VERIFY W/ SITE CONDITIONS
FP-11	BLOCK OUT IN STEM WALL FOR DOORS, HVAC, ETC. AS REQUIRED
FP-12	18"x24" CRAWL SPACE ACCESS. INSULATE AND WEATHER STRIP. SEE DIV. 01002.1 SHEET A-1
FP-13	PRESSURE BLOCKING OF SAME SIZE AS ADJACENT JOIST.
FP-14	24"X24"X7" MAT FOOTING ON SOLID SUBSTRATE W/ (2) #4 BAR EACH WAY OR 12"X7" STRIP FOOTING PER DETAIL 16/D1
FP-15	30"X30"X7" MAT FOOTING ON SOLID SUBSTRATE W/ (2) #4 BAR EACH WAY OR 15"X7" STRIP FOOTING PER DETAIL 16/D1.
FP-16	36"X36"X12" MAT FOOTING ON SOLID SUBSTRATE W/ (2) #4 BAR EACH WAY
FP-17	STUB STEEL 12" INTO SLAB @ 12"oc
FP-18	FLOOR JOIST SEE DIV. 6 SHEET A-1
FP-19	4x8 BEAM LINE, SOLID BLOCKING BETWEEN JOIST OVER SUPPORT. SEE DIVISION 06100 SHEET A-1
FP-20	PROVIDE SOLID BLOCKING THRU JOIST SYSTEM TO PROVIDE SAME AREA OF BEAM SUPPORT AS ABOVE AND BELOW SEE DIV. 6 SHEET A-1
FP-21	MIN. 1" CLEARANCE FROM CONCRETE AT END OF BEAMS
FP-22	EXTEND PIER MIN 18" BELOW SURROUNDING GRADE
FP-23	3" DIAMETER STEEL POST
FP-24	EDGE OF CONCRETE

5079
JOHN KAPPLER
ORIGINAL SIGNATURE REQUIRED

Date	By	Description
9/4/24	AG	PERMIT SET

Lee Remodel

8448 N Mercer Way, Mercer Island, WA

ARCHITECTURAL INNOVATIONS, P.S.
Forward Thinking Design Solutions For Your Environment
14311 SE 16th St
Bellevue, WA 98007
1-800-888-4517
www.kapplerhomeplans.com

TITLE

JOB NO. : 23050.05
STARTING NO. : 23050.03

SHEET

A2

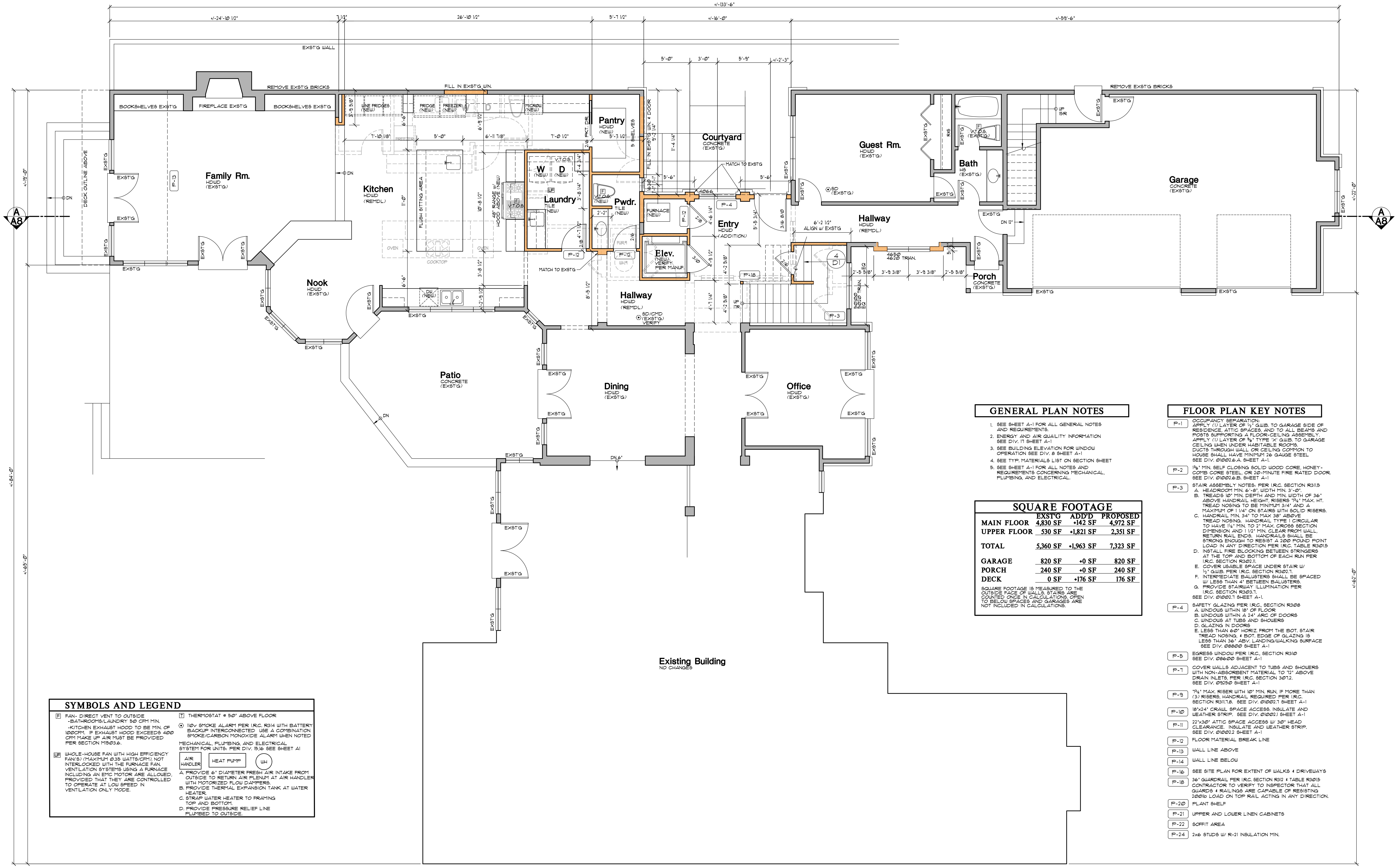
+/-133'-6"
+/-24'-10 1/2"
26'-10 1/2"
5'-7 1/2"
+/-16'-0"
+/-55'-6"
EXST'G WALL
REMOVE EXST'G BRICKS
FILL IN EXST'G WIN.
BOOKSHELVES EXST'G
FIREPLACE EXST'G
LINE FRIDGES
FRIDGE (NEW)
FREEZER (NEW)
MICROW (NEW)
Family Rm.
HDWD (EXST'G)
Kitchen
HDWD (REMDL)
FLUSH SITTING AREA
COOKTOP
OVEN
Pantry
HDWD (NEW)
5 SHELVES
FILL IN EXST'G WIN. & DOOR
W (NEW)
D (NEW)
V.T.O.S.
Laundry
TILE (NEW)
Pwdr.
TILE (NEW)
FURNACE (NEW)
Elev.
(NEW) VERIFY PER MANUF.
MATCH TO EXST'G
Courtyard
CONCRETE (EXST'G)
Entry
HDWD (ADDITION)
Hallway
HDWD (REMDL)
6'-2 1/2" ALIGN w/ EXST'G
Guest Rm.
HDWD (EXST'G)
Bath
HB (EXST'G)
SD (EXST'G)
4650 4610 TRAN.
Porch
CONCRETE (EXST'G)
Garage
CONCRETE (EXST'G)
Nook
HDWD (EXST'G)
Patio
CONCRETE (EXST'G)
Dining
HDWD (EXST'G)
Hallway
HDWD (REMDL)
SD/CMD (EXST'G) VERIFY
Office
HDWD (EXST'G)
UP 15R
DN
DN 6"
DECK OUTLINE ABOVE
Existing Building
NO CHANGES
A
A8
4
D1
+/-84'-0"
+/-65'-0"
+/-62'-0"
EXST'G

MAIN FLOOR PLAN

SCALE 1/4"=1'-0"

GENERAL PLAN NOTES

1. SEE SHEET A-1 FOR ALL GENERAL NOTES AND REQUIREMENTS.
2. ENERGY AND AIR QUAILITY INFORMATION SEE DIV. 17 SHEET A-1
3. SEE BUILDING ELEVATION FOR WINDOW OPERATION SEE DIV. 8 SHEET A-1
4. SEE TYP. MATERIALS LIST ON SECTION SHEET
5. SEE SHEET A-1 FOR ALL NOTES AND REQUIREMENTS CONCERNING MECHANICAL, PLUMBING, AND ELECTRICAL.

SQUARE FOOTAGE

	EXST'G	ADD'D	PROPOSED
MAIN FLOOR	4,830 SF	+142 SF	4,972 SF
UPPER FLOOR	530 SF	+1,821 SF	2,351 SF
TOTAL	5,360 SF	+1,963 SF	7,323 SF
GARAGE	820 SF	+0 SF	820 SF
PORCH	240 SF	+0 SF	240 SF
DECK	0 SF	+176 SF	176 SF

SQUARE FOOTAGE IS MEASURED TO THE OUTSIDE FACE OF WALLS. STAIRS ARE COUNTED ONCE IN CALCULATIONS. OPEN TO BELOW SPACES AND GARAGES ARE NOT INCLUDED IN CALCULATIONS.

FLOOR PLAN KEY NOTES

P-1	OCCUPANCY SEPARATION: APPLY (1) LAYER OF ½" G.W.B. TO GARAGE SIDE OF RESIDENCE, ATTIC SPACES, AND TO ALL BEAMS AND POSTS SUPPORTING A FLOOR-CEILING ASSEMBLY. APPLY (1) LAYER OF ⅝" TYPE 'X' G.W.B. TO GARAGE CEILING WHEN UNDER HABITABLE ROOMS. DUCTS THROUGH WALL OR CEILING COMMON TO HOUSE SHALL HAVE MINIMUM 26 GAUGE STEEL SEE DIV. 01002.6.A. SHEET A-1.
P-2	1⅜" MIN. SELF CLOSING SOLID WOOD CORE, HONEYCOMB CORE STEEL, OR 20-MINUTE FIRE RATED DOOR. SEE DIV. 01002.6.B. SHEET A-1
P-3	STAIR ASSEMBLY NOTES: PER I.R.C. SECTION R311.5 A. HEADROOM MIN. 6'-8", WIDTH MIN. 3'-0". B. TREADS 10" MIN. DEPTH AND MIN. WIDTH OF 36" ABOVE HANDRAIL HEIGHT, RISERS 7¾" MAX. HT. TREAD NOSING TO BE MINIMUM 3/4" AND A MAXIMUM OF 1 1/4" ON STAIRS WITH SOLID RISERS. C. HANDRAIL MIN. 34" TO MAX 38" ABOVE TREAD NOSING. HANDRAIL TYPE I CIRCULAR TO HAVE 1¼" MIN. TO 2" MAX. CROSS SECTION DIMENSION AND 1 1/2" MIN. CLEAR FROM WALL, RETURN RAIL ENDS. HANDRAILS SHALL BE STRONG ENOUGH TO RESIST A 200 POUND POINT LOAD IN ANY DIRECTION PER I.R.C. TABLE R301.5 D. INSTALL FIRE BLOCKING BETWEEN STRINGERS AT THE TOP AND BOTTOM OF EACH RUN PER I.R.C. SECTION R302.11. E. COVER USABLE SPACE UNDER STAIR W/ ½" G.W.B. PER I.R.C. SECTION R302.7. F. INTERMEDIATE BALUSTERS SHALL BE SPACED W/ LESS THAN 4" BETWEEN BALUSTERS. G. PROVIDE STAIRWAY ILLUMINATION PER I.R.C. SECTION R303.7. SEE DIV. 01002.7 SHEET A-1.
P-4	SAFETY GLAZING PER I.R.C., SECTION R308 A. WINDOWS WITHIN 18" OF FLOOR B. WINDOWS WITHIN A 24" ARC OF DOORS C. WINDOWS AT TUBS AND SHOWERS D. GLAZING IN DOORS E. LESS THAN 60" HORIZ. FROM THE BOT. STAIR TREAD NOSING, & BOT. EDGE OF GLAZING IS LESS THAN 36" ABV. LANDING/WALKING SURFACE SEE DIV. 08800 SHEET A-1
P-5	EGRESS WINDOW PER I.R.C., SECTION R310 SEE DIV. 08600 SHEET A-1
P-7	COVER WALLS ADJACENT TO TUBS AND SHOWERS WITH NON-ABSORBENT MATERIAL TO 72" ABOVE DRAIN INLETS, PER I.R.C. SECTION 307.2. SEE DIV. 09250 SHEET A-1
P-9	7¾" MAX. RISER WITH 10" MIN. RUN, IF MORE THAN (3) RISERS, HANDRAIL REQUIRED PER I.R.C. SECTION R311.7.8. SEE DIV. 01002.7 SHEET A-1
P-10	18"x24" CRAWL SPACE ACCESS. INSULATE AND WEATHER STRIP. SEE DIV. 01002.1 SHEET A-1
P-11	22"x30" ATTIC SPACE ACCESS W/ 30" HEAD CLEARANCE. INSULATE AND WEATHER STRIP. SEE DIV. 01002.2 SHEET A-1
P-12	FLOOR MATERIAL BREAK LINE
P-13	WALL LINE ABOVE
P-14	WALL LINE BELOW
P-16	SEE SITE PLAN FOR EXTENT OF WALKS & DRIVEWAYS
P-18	36" GUARDRAIL PER I.R.C. SECTION R312 & TABLE R301.5 CONTRACTOR TO VERIFY TO INSPECTOR THAT ALL GUARDS & RAILINGS ARE CAPABLE OF RESISTING 200lb LOAD ON TOP RAIL ACTING IN ANY DIRECTION.
P-20	PLANT SHELF
P-21	UPPER AND LOWER LINEN CABINETS
P-22	SOFFIT AREA
P-24	2x6 STUDS W/ R-21 INSULATION MIN.

SYMBOLS AND LEGEND

F	FAN- DIRECT VENT TO OUTSIDE -BATHROOMS/LAUNDRY 50 CFM MIN. -KITCHEN EXHAUST HOOD TO BE MIN. OF 100CFM. IF EXHAUST HOOD EXCEEDS 400 CFM MAKE UP AIR MUST BE PROVIDED PER SECTION M1503.6.
WF	WHOLE-HOUSE FAN WITH HIGH EFFICIENCY FAN(S) (MAXIMUM 0.35 WATTS/CFM), NOT INTERLOCKED WITH THE FURNACE FAN. VENTILATION SYSTEMS USING A FURNACE INCLUDING AN EMC MOTOR ARE ALLOWED, PROVIDED THAT THEY ARE CONTROLLED TO OPERATE AT LOW SPEED IN VENTILATION ONLY MODE.
T	THERMOSTAT @ 50" ABOVE FLOOR
⊙	110v SMOKE ALARM PER I.R.C. R314 WITH BATTERY BACKUP INTERCONNECTED USE A COMBINATION SMOKE/CARBON MONOXIDE ALARM WHEN NOTED

MECHANICAL, PLUMBING, AND ELECTRICAL SYSTEM FOR UNITS: PER DIV. 15,16 SEE SHEET A1

AIR HANDLER

HEAT PUMP

WH

A. PROVIDE 6" DIAMETER FRESH AIR INTAKE FROM OUTSIDE TO RETURN AIR PLENUM AT AIR HANDLER WITH MOTORIZED FLOW DAMPERS.
B. PROVIDE THERMAL EXPANSION TANK AT WATER HEATER.
C. STRAP WATER HEATER TO FRAMING TOP AND BOTTOM.
D. PROVIDE PRESSURE RELIEF LINE PLUMBED TO OUTSIDE.

REGISTERED ARCHITECT
5079
JOHN KAPPLER
STATE OF WASHINGTON
ORIGINAL SIGNATURE REQUIRED

Date	By	Description
9/4/24	AG	PERMIT SET

Lee Remodel

8448 N Mercer Way, Mercer Island, WA

ARCHITECTURAL INNOVATIONS, P.S.
Forward Thinking Design Solutions For Your Environment
14311 SE 16th St
Bellevue, WA 98007
1-800-888-4517
www.kapplerhomeplans.com

TITLE
JOB NO. : 23050.05
STARTING NO. : 23050.03

SHEET
A3

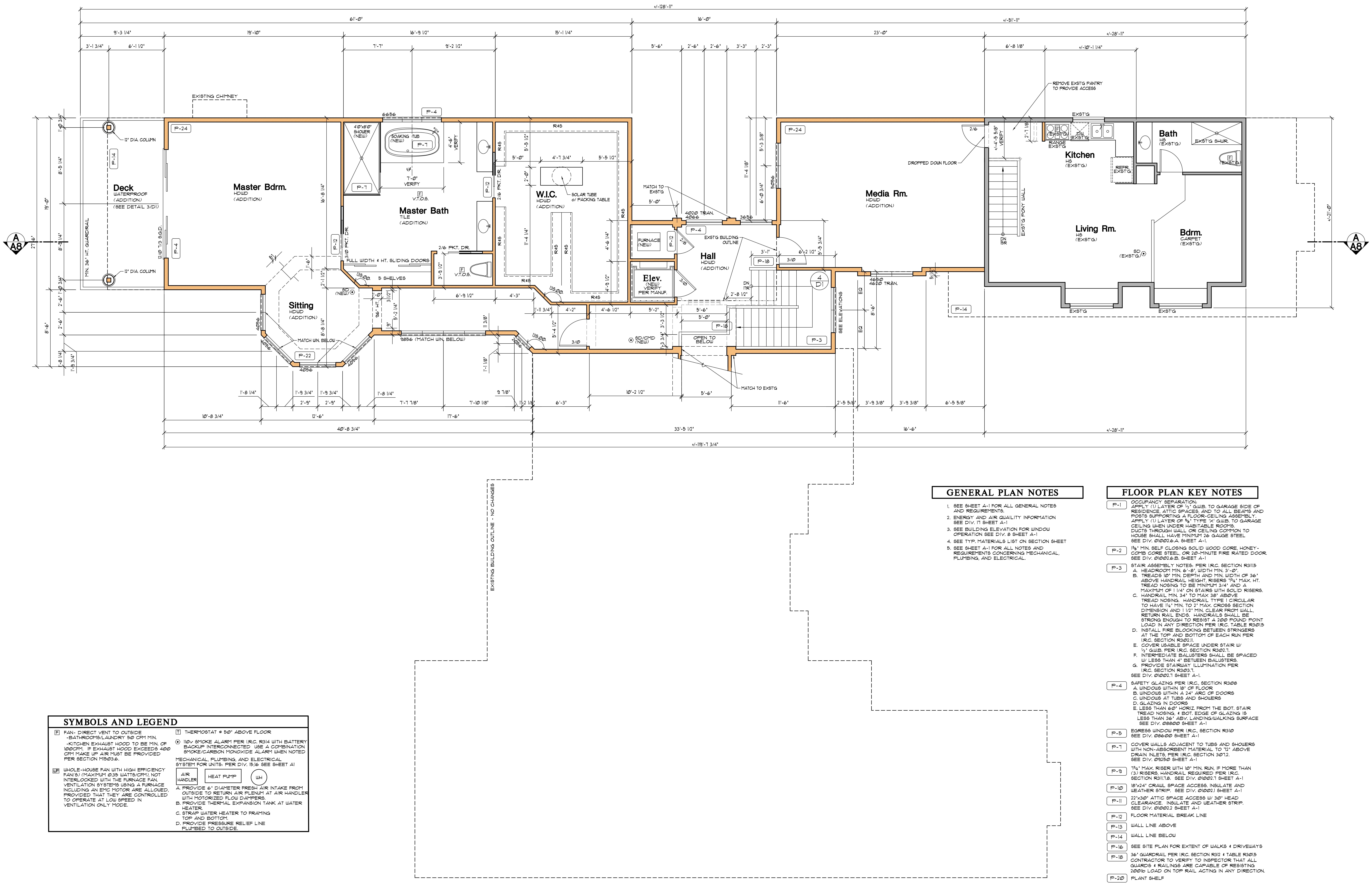
+/-128'-11"
61'-0"
16'-0"
+/-51'-11"
9'-3 1/4"
19'-10"
16'-9 1/2"
15'-1 1/4"
23'-0"
+/-28'-11"
3'-1 3/4"
6'-1 1/2"
7'-7"
9'-2 1/2"
5'-6"
2'-6"
2'-6"
3'-3"
2'-3"
6'-8 1/8"
+/-10'-1 1/4"
EXISTING CHIMNEY
REMOVE EXST'G PANTRY TO PROVIDE ACCESS
12" DIA. COLUMN
12" DIA. COLUMN
P-24
P-14
Deck
WATERPROOF
(ADDITION)
(SEE DETAIL 3/D1)
MIN. 36" HT. GUARDRAIL
12/0 7/3 S.G.D.
P-4
Master Bdrm.
HDWD
(ADDITION)
16'-8 1/4"
4'0"x8'0" SHOWER (NEW)
P-7
SOAKING TUB (NEW)
P-7
6656
P-4
4'-6" VERIFY
7'-0" VERIFY
F V.T.O.S.
Master Bath
TILE
(ADDITION)
3/0 PKT. DR.
P-12
FULL WIDTH & HT. SLIDING DOORS
2/6 PKT. DR.
F V.T.O.S.
5 SHELVES
135.00.
2/6 PKT. DR.
P-12
R&S
W.I.C.
HDWD
(ADDITION)
SOLAR TUBE o/ PACKING TABLE
5'-0"
4'-7 3/4"
5'-5 1/2"
11'-4 1/4"
4'-6 1/4"
4'-9 1/2"
MATCH TO EXST'G
4020 TRAN.
4066
3656
FURNACE (NEW)
P-12
2/8
Elev.
(NEW)
VERIFY
PER MANUF.
3/0
EXST'G BUILDING OUTLINE
Hall
HDWD
(ADDITION)
P-18
DN 17R
4
D1
OPEN TO BELOW
P-18
P-3
SD/CMD (NEW)
MATCH TO EXST'G
SEE ELEVATIONS
EQ
8'-6"
EQ
4650
4620 TRAN.
11'-4 1/8"
5'-3 3/8"
6'-0 3/4"
5056
Media Rm.
HDWD
(ADDITION)
DROPPED DOWN FLOOR
2/6
+/-4'-5 5/8" VERIFY
P-14
DN 15R
EXST'G PONY WALL
EXST'G
RANGE EXST'G
DW EXST'G
Kitchen
HS
(EXST'G)
REFR. EXST'G
Bath
HS
(EXST'G)
EXST'G SHWR.
Living Rm.
HS
(EXST'G)
SD (EXST'G)
Bdrm.
CARPET
(EXST'G)
EXST'G
EXST'G
+/-21'-0"
A
A8
A
A8
Sitting
HDWD
(ADDITION)
SD (NEW)
MATCH WIN. BELOW
4056
4056
4056
4056
P-22
9856 (MATCH WIN. BELOW)
96" HT.
135.00.
135.00.
3/0
19'-0"
27'-6"
8'-5 1/4"
8'-5 1/4"
8'-6"
10'-8 3/4"
12'-6"
17'-6"
40'-8 3/4"
33'-5 1/2"
16'-6"
+/-28'-11"
+/-119'-7 3/4"
10'-2 1/2"
5'-6"
11'-6"
2'-5 5/8"
3'-9 3/8"
3'-9 3/8"
6'-5 5/8"
EXISTING BUILDING OUTLINE - NO CHANGES

UPPER FLOOR PLAN

SCALE 1/4"=1'-0"

SYMBOLS AND LEGEND

F FAN- DIRECT VENT TO OUTSIDE
-BATHROOMS/LAUNDRY 50 CFM MIN.
-KITCHEN EXHAUST HOOD TO BE MIN. OF 100CFM. IF EXHAUST HOOD EXCEEDS 400 CFM MAKE UP AIR MUST BE PROVIDED PER SECTION M1503.6.

WF WHOLE-HOUSE FAN WITH HIGH EFFICIENCY FAN(S) (MAXIMUM 0.35 WATTS/CFM), NOT INTERLOCKED WITH THE FURNACE FAN. VENTILATION SYSTEMS USING A FURNACE INCLUDING AN EMC MOTOR ARE ALLOWED, PROVIDED THAT THEY ARE CONTROLLED TO OPERATE AT LOW SPEED IN VENTILATION ONLY MODE.

T THERMOSTAT @ 50" ABOVE FLOOR

⊙ 110v SMOKE ALARM PER I.R.C. R314 WITH BATTERY BACKUP INTERCONNECTED USE A COMBINATION SMOKE/CARBON MONOXIDE ALARM WHEN NOTED

MECHANICAL, PLUMBING, AND ELECTRICAL SYSTEM FOR UNITS: PER DIV. 15,16 SEE SHEET A1

AIR HANDLER HEAT PUMP WH

A. PROVIDE 6" DIAMETER FRESH AIR INTAKE FROM OUTSIDE TO RETURN AIR PLENUM AT AIR HANDLER WITH MOTORIZED FLOW DAMPERS.
B. PROVIDE THERMAL EXPANSION TANK AT WATER HEATER.
C. STRAP WATER HEATER TO FRAMING TOP AND BOTTOM.
D. PROVIDE PRESSURE RELIEF LINE PLUMBED TO OUTSIDE.

GENERAL PLAN NOTES

1. SEE SHEET A-1 FOR ALL GENERAL NOTES AND REQUIREMENTS.
2. ENERGY AND AIR QUAILITY INFORMATION SEE DIV. 17 SHEET A-1
3. SEE BUILDING ELEVATION FOR WINDOW OPERATION SEE DIV. 8 SHEET A-1
4. SEE TYP. MATERIALS LIST ON SECTION SHEET
5. SEE SHEET A-1 FOR ALL NOTES AND REQUIREMENTS CONCERNING MECHANICAL, PLUMBING, AND ELECTRICAL.

FLOOR PLAN KEY NOTES

P-1	OCCUPANCY SEPARATION: APPLY (1) LAYER OF ½" G.W.B. TO GARAGE SIDE OF RESIDENCE, ATTIC SPACES, AND TO ALL BEAMS AND POSTS SUPPORTING A FLOOR-CEILING ASSEMBLY. APPLY (1) LAYER OF ⅝" TYPE 'X' G.W.B. TO GARAGE CEILING WHEN UNDER HABITABLE ROOMS. DUCTS THROUGH WALL OR CEILING COMMON TO HOUSE SHALL HAVE MINIMUM 26 GAUGE STEEL SEE DIV. 01002.6.A. SHEET A-1.
P-2	1⅜" MIN. SELF CLOSING SOLID WOOD CORE, HONEY-COMB CORE STEEL, OR 20-MINUTE FIRE RATED DOOR. SEE DIV. 01002.6.B. SHEET A-1
P-3	STAIR ASSEMBLY NOTES: PER I.R.C. SECTION R311.5 A. HEADROOM MIN. 6'-8", WIDTH MIN. 3'-0". B. TREADS 10" MIN. DEPTH AND MIN. WIDTH OF 36" ABOVE HANDRAIL HEIGHT, RISERS 7¾" MAX. HT. TREAD NOSING TO BE MINIMUM 3/4" AND A MAXIMUM OF 1 1/4" ON STAIRS WITH SOLID RISERS. C. HANDRAIL MIN. 34" TO MAX 38" ABOVE TREAD NOSING. HANDRAIL TYPE 1 CIRCULAR TO HAVE 1¼" MIN. TO 2" MAX. CROSS SECTION DIMENSION AND 1 1/2" MIN. CLEAR FROM WALL, RETURN RAIL ENDS. HANDRAILS SHALL BE STRONG ENOUGH TO RESIST A 200 POUND POINT LOAD IN ANY DIRECTION PER I.R.C. TABLE R301.5 D. INSTALL FIRE BLOCKING BETWEEN STRINGERS AT THE TOP AND BOTTOM OF EACH RUN PER I.R.C. SECTION R302.11. E. COVER USABLE SPACE UNDER STAIR W/ ½" G.W.B. PER I.R.C. SECTION R302.7. F. INTERMEDIATE BALUSTERS SHALL BE SPACED W/ LESS THAN 4" BETWEEN BALUSTERS. G. PROVIDE STAIRWAY ILLUMINATION PER I.R.C. SECTION R303.7. SEE DIV. 01002.7 SHEET A-1.
P-4	SAFETY GLAZING PER I.R.C., SECTION R308 A. WINDOWS WITHIN 18" OF FLOOR B. WINDOWS WITHIN A 24" ARC OF DOORS C. WINDOWS AT TUBS AND SHOWERS D. GLAZING IN DOORS E. LESS THAN 60" HORIZ. FROM THE BOT. STAIR TREAD NOSING, & BOT. EDGE OF GLAZING IS LESS THAN 36" ABV. LANDING/WALKING SURFACE SEE DIV. 08800 SHEET A-1
P-5	EGRESS WINDOW PER I.R.C., SECTION R310 SEE DIV. 08600 SHEET A-1
P-7	COVER WALLS ADJACENT TO TUBS AND SHOWERS WITH NON-ABSORBENT MATERIAL TO 72" ABOVE DRAIN INLETS, PER I.R.C. SECTION 307.2. SEE DIV. 09250 SHEET A-1
P-9	7¾" MAX. RISER WITH 10" MIN. RUN, IF MORE THAN (3) RISERS, HANDRAIL REQUIRED PER I.R.C. SECTION R311.7.8. SEE DIV. 01002.7 SHEET A-1
P-10	18"x24" CRAWL SPACE ACCESS. INSULATE AND WEATHER STRIP. SEE DIV. 01002.1 SHEET A-1
P-11	22"x30" ATTIC SPACE ACCESS W/ 30" HEAD CLEARANCE. INSULATE AND WEATHER STRIP. SEE DIV. 01002.2 SHEET A-1
P-12	FLOOR MATERIAL BREAK LINE
P-13	WALL LINE ABOVE
P-14	WALL LINE BELOW
P-16	SEE SITE PLAN FOR EXTENT OF WALKS & DRIVEWAYS
P-18	36" GUARDRAIL PER I.R.C. SECTION R312 & TABLE R301.5 CONTRACTOR TO VERIFY TO INSPECTOR THAT ALL GUARDS & RAILINGS ARE CAPABLE OF RESISTING 200lb LOAD ON TOP RAIL ACTING IN ANY DIRECTION.
P-20	PLANT SHELF
P-21	UPPER AND LOWER LINEN CABINETS
P-22	SOFFIT AREA
P-24	2x6 STUDS W/ R-21 INSULATION MIN.

5879
REGISTERED ARCHITECT
JOHN KAPPLER
STATE OF WASHINGTON
ORIGINAL SIGNATURE REQUIRED

Date	By	Description
9/4/24	AG	PERMIT SET

Lee Remodel

8448 N Mercer Way, Mercer Island, WA

ARCHITECTURAL INNOVATIONS, P.S.
Forward Thinking Design Solutions For Your Environment
14311 SE 16th St
Bellevue, WA 98007
1-800-888-4517
www.kapplerhomeplans.com

TITLE

JOB NO. : 23050.05
STARTING NO. : 23050.03

SHEET

A4

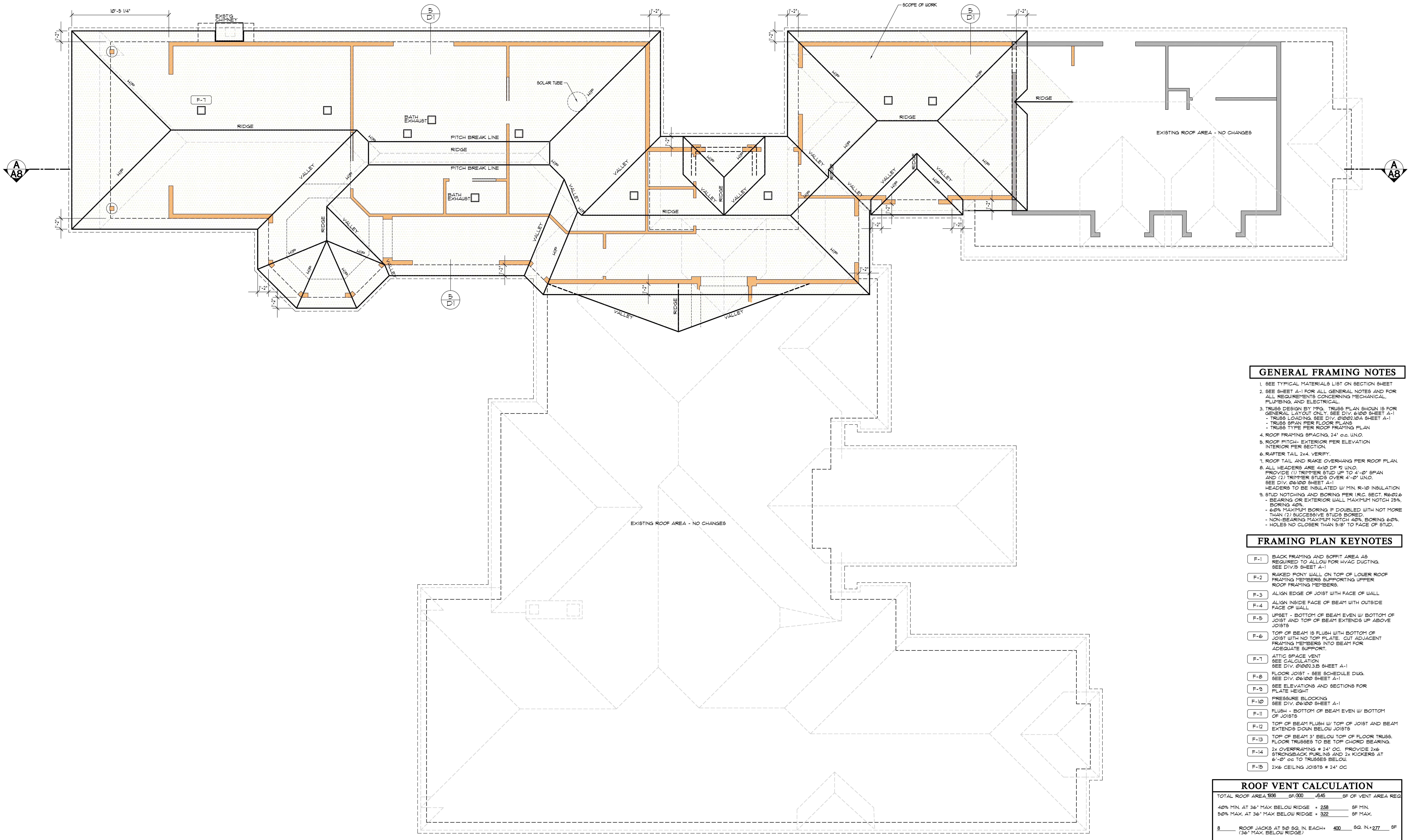

ARCHITECTURAL ROOF PLAN

SCALE 1/4"=1'-0"

GENERAL FRAMING NOTES

1. SEE TYPICAL MATERIALS LIST ON SECTION SHEET
2. SEE SHEET A-1 FOR ALL GENERAL NOTES AND FOR ALL REQUIREMENTS CONCERNING MECHANICAL, PLUMBING, AND ELECTRICAL.
3. TRUSS DESIGN BY MFG. TRUSS PLAN SHOWN IS FOR GENERAL LAYOUT ONLY. SEE DIV. 6100 SHEET A-1
   - TRUSS LOADING. SEE DIV. 01002.10A SHEET A-1
   - TRUSS SPAN PER FLOOR PLANS
   - TRUSS TYPE PER ROOF FRAMING PLAN
4. ROOF FRAMING SPACING, 24" o.c. U.N.O.
5. ROOF PITCH- EXTERIOR PER ELEVATION INTERIOR PER SECTION.
6. RAFTER TAIL 2x4. VERIFY.
7. ROOF TAIL AND RAKE OVERHANG PER ROOF PLAN.
8. ALL HEADERS ARE 4x10 DF #2 U.N.O.
   PROVIDE (1) TRIMMER STUD UP TO 4'-0" SPAN AND (2) TRIMMER STUDS OVER 4'-0" U.N.O.
   SEE DIV. 06100 SHEET A-1
   HEADERS TO BE INSULATED W/ MIN. R-10 INSULATION
9. STUD NOTCHING AND BORING PER I.R.C. SECT. R602.6
   - BEARING OR EXTERIOR WALL MAXIMUM NOTCH 25%, BORING 40%.
   - 60% MAXIMUM BORING IF DOUBLED WITH NOT MORE THAN (2) SUCCESSIVE STUDS BORED.
   - NON-BEARING MAXIMUM NOTCH 40%, BORING 60%.
   - HOLES NO CLOSER THAN 5/8" TO FACE OF STUD.

FRAMING PLAN KEYNOTES

F-1	BACK FRAMING AND SOFFIT AREA AS REQUIRED TO ALLOW FOR HVAC DUCTING. SEE DIV.15 SHEET A-1
F-2	RAKED PONY WALL ON TOP OF LOWER ROOF FRAMING MEMBERS SUPPORTING UPPER ROOF FRAMING MEMBERS.
F-3	ALIGN EDGE OF JOIST WITH FACE OF WALL
F-4	ALIGN INSIDE FACE OF BEAM WITH OUTSIDE FACE OF WALL
F-5	UPSET - BOTTOM OF BEAM EVEN W/ BOTTOM OF JOIST AND TOP OF BEAM EXTENDS UP ABOVE JOISTS
F-6	TOP OF BEAM IS FLUSH WITH BOTTOM OF JOIST WITH NO TOP PLATE. CUT ADJACENT FRAMING MEMBERS INTO BEAM FOR ADEQUATE SUPPORT.
F-7	ATTIC SPACE VENT SEE CALCULATION SEE DIV. 01002.3.B SHEET A-1
F-8	FLOOR JOIST - SEE SCHEDULE DWG. SEE DIV. 06100 SHEET A-1
F-9	SEE ELEVATIONS AND SECTIONS FOR PLATE HEIGHT
F-10	PRESSURE BLOCKING SEE DIV. 06100 SHEET A-1
F-11	FLUSH - BOTTOM OF BEAM EVEN W/ BOTTOM OF JOISTS
F-12	TOP OF BEAM FLUSH W/ TOP OF JOIST AND BEAM EXTENDS DOWN BELOW JOISTS
F-13	TOP OF BEAM 3" BELOW TOP OF FLOOR TRUSS. FLOOR TRUSSES TO BE TOP CHORD BEARING.
F-14	2x OVERFRAMING @ 24" OC. PROVIDE 2x6 STRONGBACK PURLINS AND 2x KICKERS AT 6'-0" oc TO TRUSSES BELOW.
F-15	2X6 CEILING JOISTS @ 24" OC

ROOF VENT CALCULATION

TOTAL ROOF AREA 1936 SF/300 =6.45 SF OF VENT AREA REQ.

40% MIN. AT 36" MAX BELOW RIDGE = 2.58 SF MIN.
50% MAX. AT 36" MAX BELOW RIDGE = 3.22 SF MAX.

8 ROOF JACKS AT 50 SQ. IN. EACH= 400 SQ. IN.= 2.77 SF
(36" MAX. BELOW RIDGE)

258.8 L.F. OF EAVE VENTS AT 3.3*SQ. IN./LF= 8554.04 SQ. IN.= 5.93 SF

TOTAL SF OF VENTILATION PROVIDED = 8.7 SF

REGISTERED ARCHITECT
5079
JOHN KAPPLER
STATE OF WASHINGTON
ORIGINAL SIGNATURE REQUIRED

Date	By	Description
9/4/24	AG	PERMIT SET

Lee Remodel

8448 N Mercer Way, Mercer Island, WA

ARCHITECTURAL INNOVATIONS, P.S.
Forward Thinking Design Solutions For Your Environment
14311 SE 16th St
Bellevue, WA 98007
1-800-888-4517
www.kapplerhomeplans.com

TITLE
JOB NO.: 23050.05
STARTING NO.: 23050.03

SHEET
A5

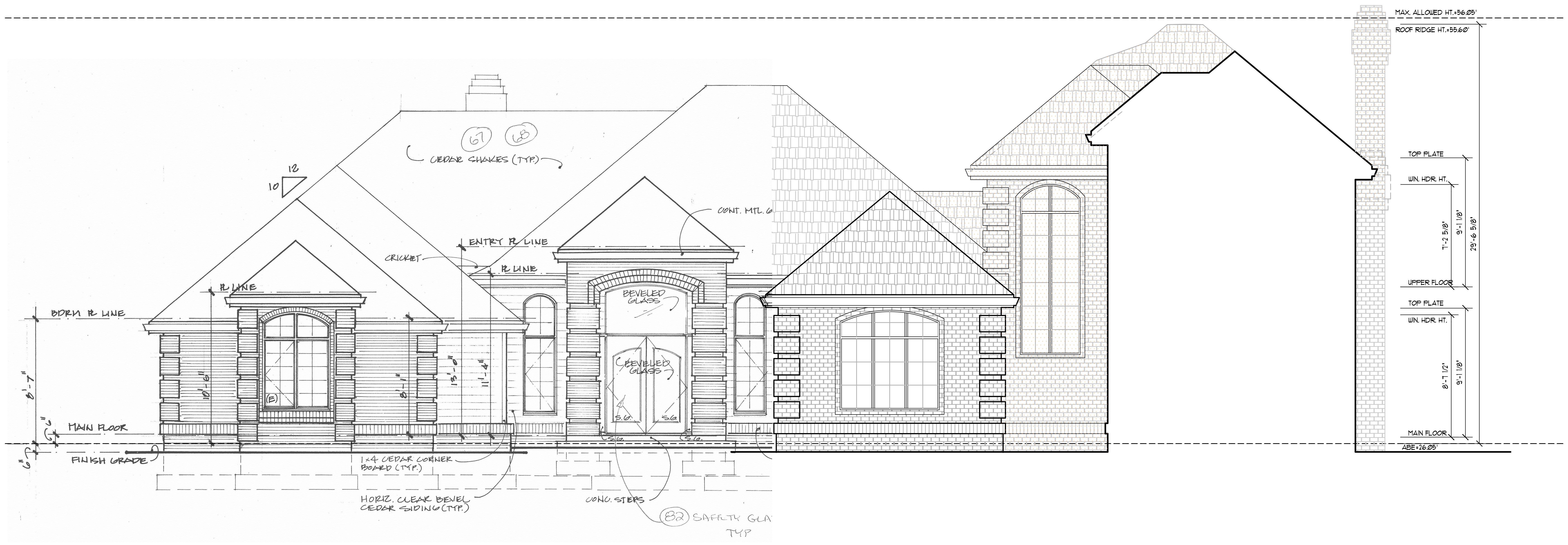
MAX. ALLOWED HT.=56.05'
ROOF RIDGE HT.=55.60'
TOP PLATE
WIN. HDR. HT.
7'-2 5/8"
9'-1 1/8"
29'-6 5/8"
UPPER FLOOR
TOP PLATE
WIN. HDR. HT.
8'-7 1/2"
9'-1 1/8"
MAIN FLOOR
ABE=26.05'
67
68
CEDAR SHAKES (TYP.)
10
12
CONT. MTL. G
ENTRY ℞ LINE
CRICKET
℞ LINE
℞ LINE
BDRM ℞ LINE
BEVELED GLASS
BEVELED GLASS
10'-6"
8'-1"
13'-0"
11'-4"
8'-7"
(E)
S.G.
S.G.
S.G.
S.G.
6"
6"
MAIN FLOOR
FINISH GRADE
1x4 CEDAR CORNER BOARD (TYP.)
HORIZ. CLEAR BEVEL CEDAR SIDING (TYP.)
CONC. STEPS
82 SAFETY GLA TYP

SOUTH-WEST ELEVATION

Scale 1/4"=1'-0"

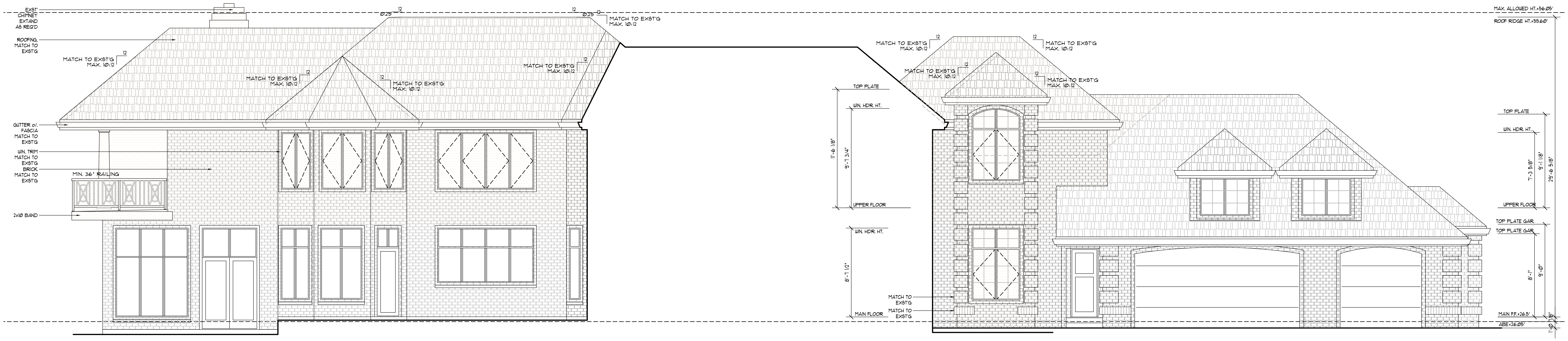
EXST' CHIMNEY EXTAND AS REQ'D
ROOFING, MATCH TO EXST'G
MATCH TO EXST'G MAX. 10:12
12
Ø.25
12
Ø.25
12
MATCH TO EXST'G MAX. 10:12
MATCH TO EXST'G MAX. 10:12
MATCH TO EXST'G MAX. 10:12
MATCH TO EXST'G MAX. 10:12
GUTTER o/. FASCIA MATCH TO EXST'G
WIN. TRIM MATCH TO EXST'G
BRICK MATCH TO EXST'G
MIN. 36" RAILING
2x10 BAND
TOP PLATE
WIN. HDR. HT.
11'-6 1/8"
9'-7 3/4"
UPPER FLOOR
WIN. HDR. HT.
8'-7 1/2"
MAIN FLOOR
MATCH TO EXST'G
MATCH TO EXST'G
MATCH TO EXST'G MAX. 10:12
MATCH TO EXST'G MAX. 10:12
MATCH TO EXST'G MAX. 10:12
MATCH TO EXST'G MAX. 10:12
MAX. ALLOWED HT.=56.05'
ROOF RIDGE HT.=55.60'
TOP PLATE
WIN. HDR. HT.
7'-3 5/8"
9'-1 1/8"
29'-6 5/8"
UPPER FLOOR
TOP PLATE GAR
TOP PLATE GAR
8'-1"
9'-0"
MAIN F.F.=26.5'
ABE=26.05'
1'-0 1/8"

NORTH-WEST ELEVATION

Scale 1/4"=1'-0"

REGISTERED ARCHITECT
5079
JOHN KAPPLER
STATE OF WASHINGTON
ORIGINAL SIGNATURE REQUIRED

Date	By	Description
9/4/24	AG	PERMIT SET

Lee Remodel

8448 N Mercer Way, Mercer Island, WA

ARCHITECTURAL INNOVATIONS, P.S.
Forward Thinking Design Solutions For Your Environment
14311 SE 16th St
Bellevue, WA 98007
1-800-888-4517
www.kapplerhomeplans.com

TITLE

JOB NO. : 23050.05
STARTING NO. : 23050.03

SHEET

A6

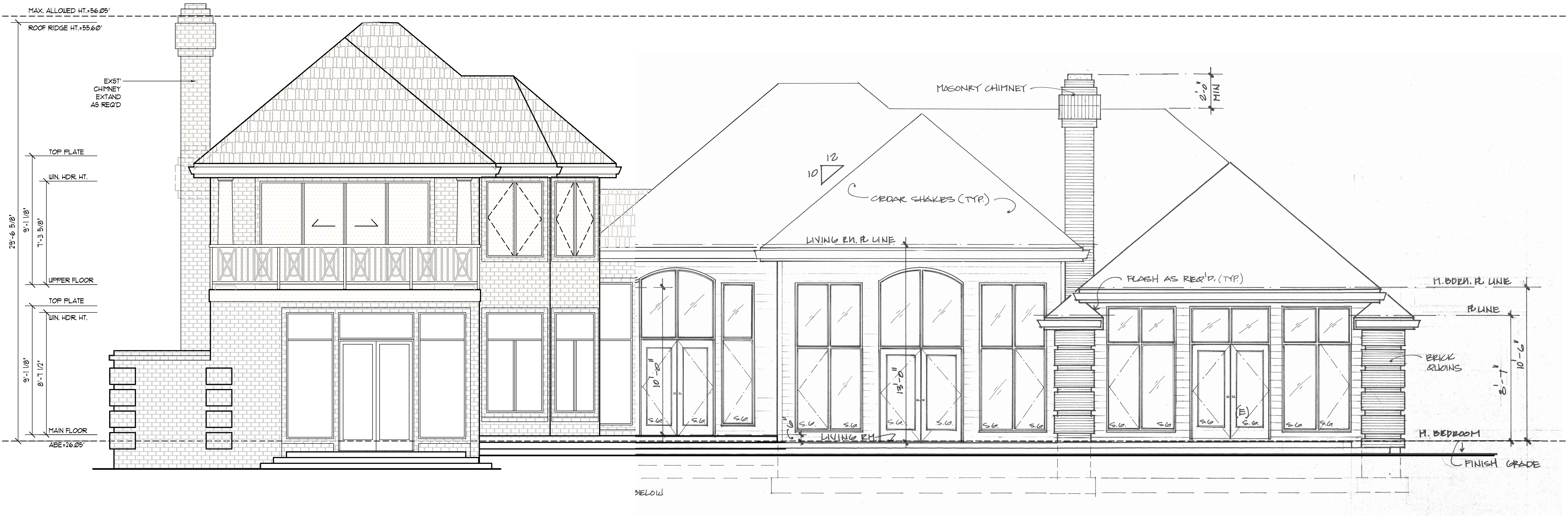
MAX. ALLOWED HT.=56.05'
ROOF RIDGE HT.=55.60'
EXST' CHIMNEY EXTAND AS REQ'D
TOP PLATE
WIN. HDR. HT.
9'-1 1/8"
7'-3 5/8"
29'-6 5/8"
UPPER FLOOR
TOP PLATE
WIN. HDR. HT.
9'-1 1/8"
8'-7 1/2"
MAIN FLOOR
ABE=26.05'
MASONRY CHIMNEY
2'-0" MIN
12
10
CEDAR SHAKES (TYP.)
LIVING RM. PL LINE
FLASH AS REQ'D. (TYP.)
M. BDRM. PL LINE
PL LINE
10'-0"
13'-0"
BRICK QUOINS
10'-6"
8'-7"
S.G.
(E)
6"
LIVING RM.
M. BEDROOM
FINISH GRADE
BELOW

NORTH-EAST ELEVATION

Scale 1/4"=1'-0"

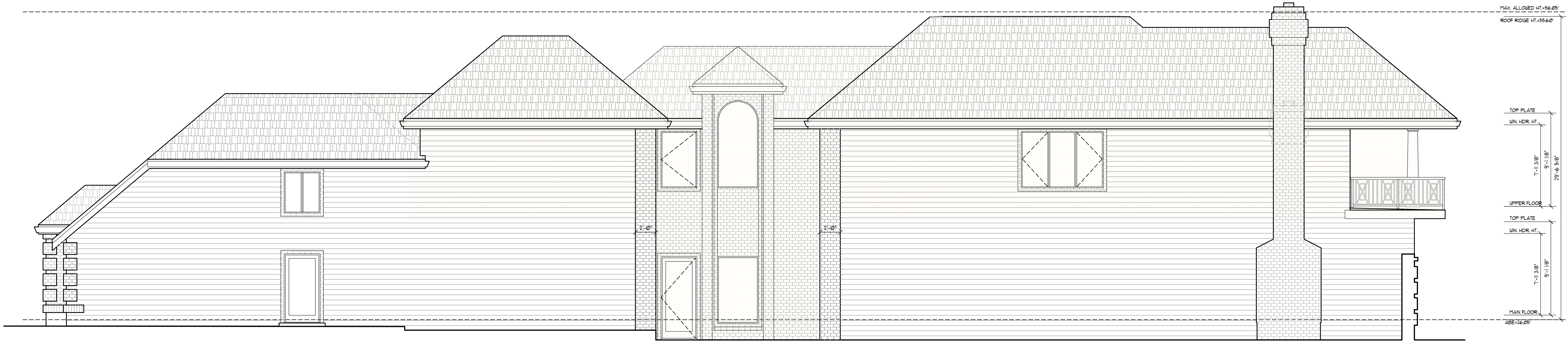
MAX. ALLOWED HT.=56.05'
ROOF RIDGE HT.=55.60'
TOP PLATE
WIN. HDR. HT.
7'-11 3/8"
9'-1 1/8"
29'-6 5/8"
UPPER FLOOR
TOP PLATE
WIN. HDR. HT.
7'-11 3/8"
9'-1 1/8"
MAIN FLOOR
ABE=26.05'
2'-0"
2'-0"

SOUTH-EAST ELEVATION

Scale 1/4"=1'-0"

5079

ORIGINAL SIGNATURE REQUIRED

Date	By	Description
9/4/24	AG	PERMIT SET

Lee Remodel

8448 N Mercer Way, Mercer Island, WA

ARCHITECTURAL INNOVATIONS, P.S.
Forward Thinking Design Solutions For Your Environment
14311 SE 16th St
Bellevue, WA 98007
1-800-888-4517
www.kapplerhomeplans.com

TITLE

JOB NO.: 23050.05
STARTING NO.: 23050.03

SHEET

A7

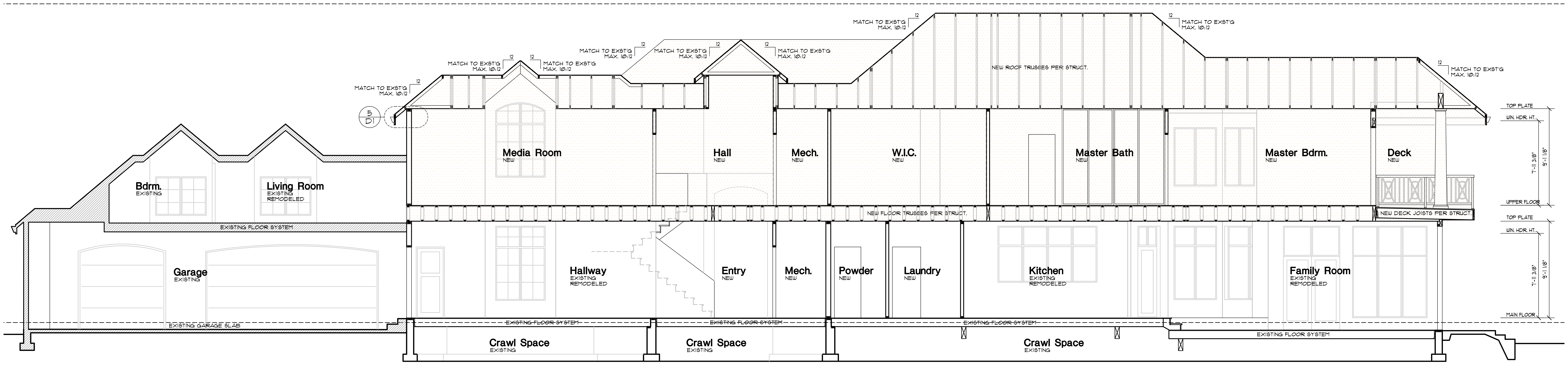
MATCH TO EXST'G MAX. 10:12
12
5
D1
NEW ROOF TRUSSES PER STRUCT.
Bdrm.
EXISTING
Living Room
EXISTING
REMODELED
Media Room
NEW
Hall
NEW
Mech.
NEW
W.I.C.
NEW
Master Bath
NEW
Master Bdrm.
NEW
Deck
NEW
EXISTING FLOOR SYSTEM
NEW FLOOR TRUSSES PER STRUCT.
NEW DECK JOISTS PER STRUCT.
TOP PLATE
WIN. HDR. HT.
UPPER FLOOR
TOP PLATE
WIN. HDR. HT.
MAIN FLOOR
7'-11 3/8"
9'-1 1/8"
7'-11 3/8"
9'-1 1/8"
Garage
EXISTING
Hallway
EXISTING
REMODELED
Entry
NEW
Mech.
NEW
Powder
NEW
Laundry
NEW
Kitchen
EXISTING
REMODELED
Family Room
EXISTING
REMODELED
EXISTING GARAGE SLAB
EXISTING FLOOR SYSTEM
EXISTING FLOOR SYSTEM
EXISTING FLOOR SYSTEM
EXISTING FLOOR SYSTEM
Crawl Space
EXISTING
Crawl Space
EXISTING
Crawl Space
EXISTING

BUILDING SECTION A-A

Scale 1/4"=1'-0"

REGISTERED ARCHITECT
5079
JOHN KAPPLER
STATE OF WASHINGTON
ORIGINAL SIGNATURE REQUIRED

Date	By	Description
9/4/24	AG	PERMIT SET

Lee Remodel

8448 N Mercer Way, Mercer Island, WA

ARCHITECTURAL INNOVATIONS, P.S.
Forward Thinking Design Solutions For Your Environment
14311 SE 16th St
Bellevue, WA 98007
1-800-888-4517
www.kapplerhomeplans.com

TITLE

JOB NO. : 23050.05
STARTING NO. : 23050.03

SHEET

A8

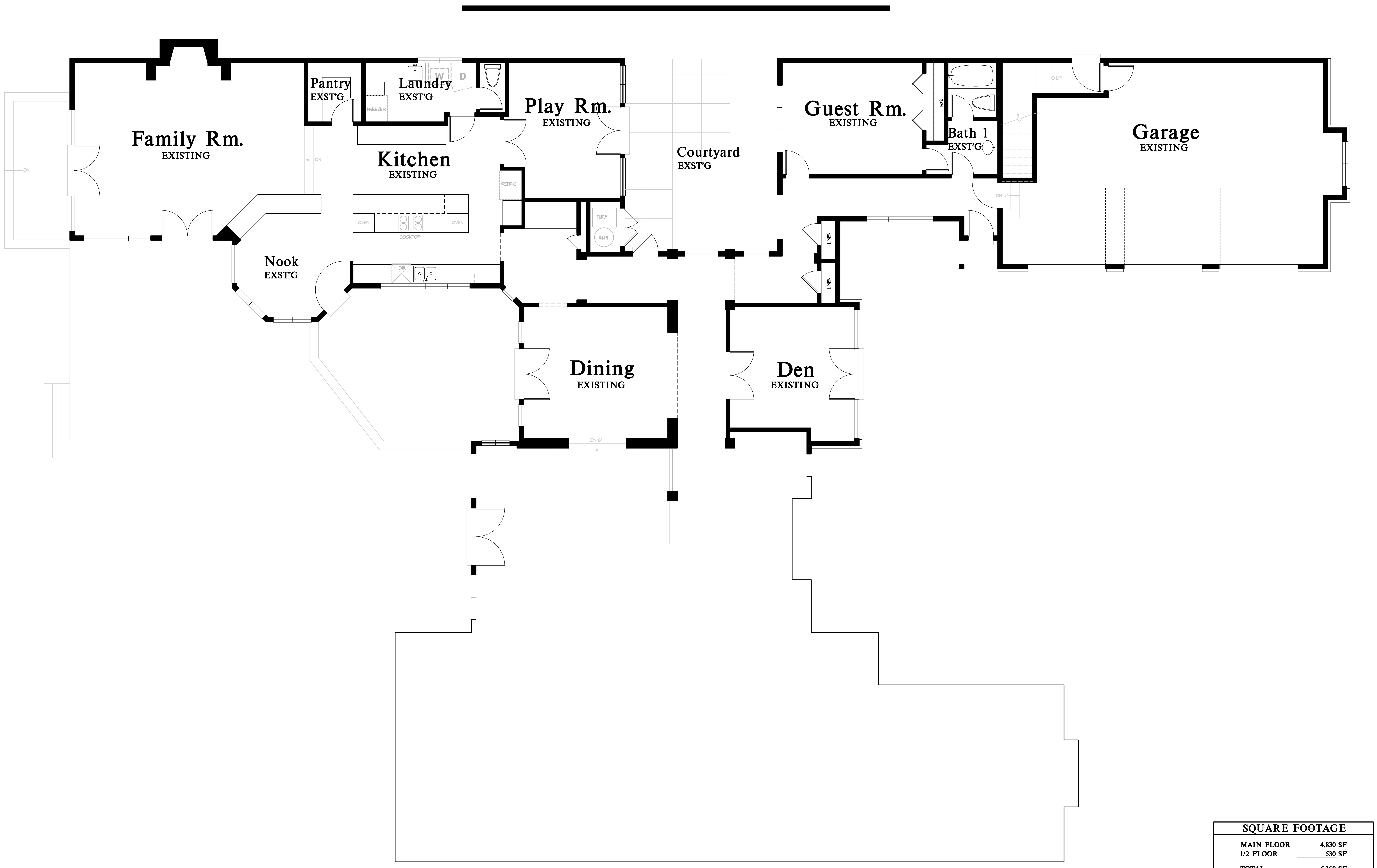
Family Rm.
EXISTING
Pantry
EXST'G
Laundry
EXST'G
W
D
FREEZER
Kitchen
EXISTING
REFRIG
OVEN
COOKTOP
OVEN
Nook
EXST'G
Play Rm.
EXISTING
FUR
W.H.
Courtyard
EXST'G
Dining
EXISTING
DN 6"
Den
EXISTING
LINEN
LINEN
Guest Rm.
EXISTING
R45
Bath 1
EXST'G
UP
DN 12"
Garage
EXISTING
DN

AS-BUILT MAIN FLOOR PLAN

Scale 1/4"=1'-0"

SQUARE FOOTAGE

MAIN FLOOR	4,830 SF
1/2 FLOOR	530 SF
TOTAL	5,360 SF
GARAGE	820 SF
PORCH	240 SF

SQUARE FOOTAGE IS MEASURED TO THE OUTSIDE FACE OF WALLS. STAIRS ARE COUNTED ONCE IN CALCULATIONS. OPEN TO BELOW SPACES AND GARAGES ARE NOT INCLUDED IN CALCULATIONS.

5079
REGISTERED ARCHITECT
JOHN KAPPLER
STATE OF WASHINGTON
ORIGINAL SIGNATURE REQUIRED

Date	By	Description
9/18/23	AG	AS-BUILT DRAWINGS

Lee Remodel

8448 N Mercer Way, Mercer Island, WA

ARCHITECTURAL INNOVATIONS, P.S.
Forward Thinking Design Solutions For Your Environment
14311 SE 16th St
Bellevue, WA 98007
1-800-888-4517
www.kapplerhomeplans.com

TITLE

JOB NO.: 23050.22
STARTING NO.: NA

SHEET

A9

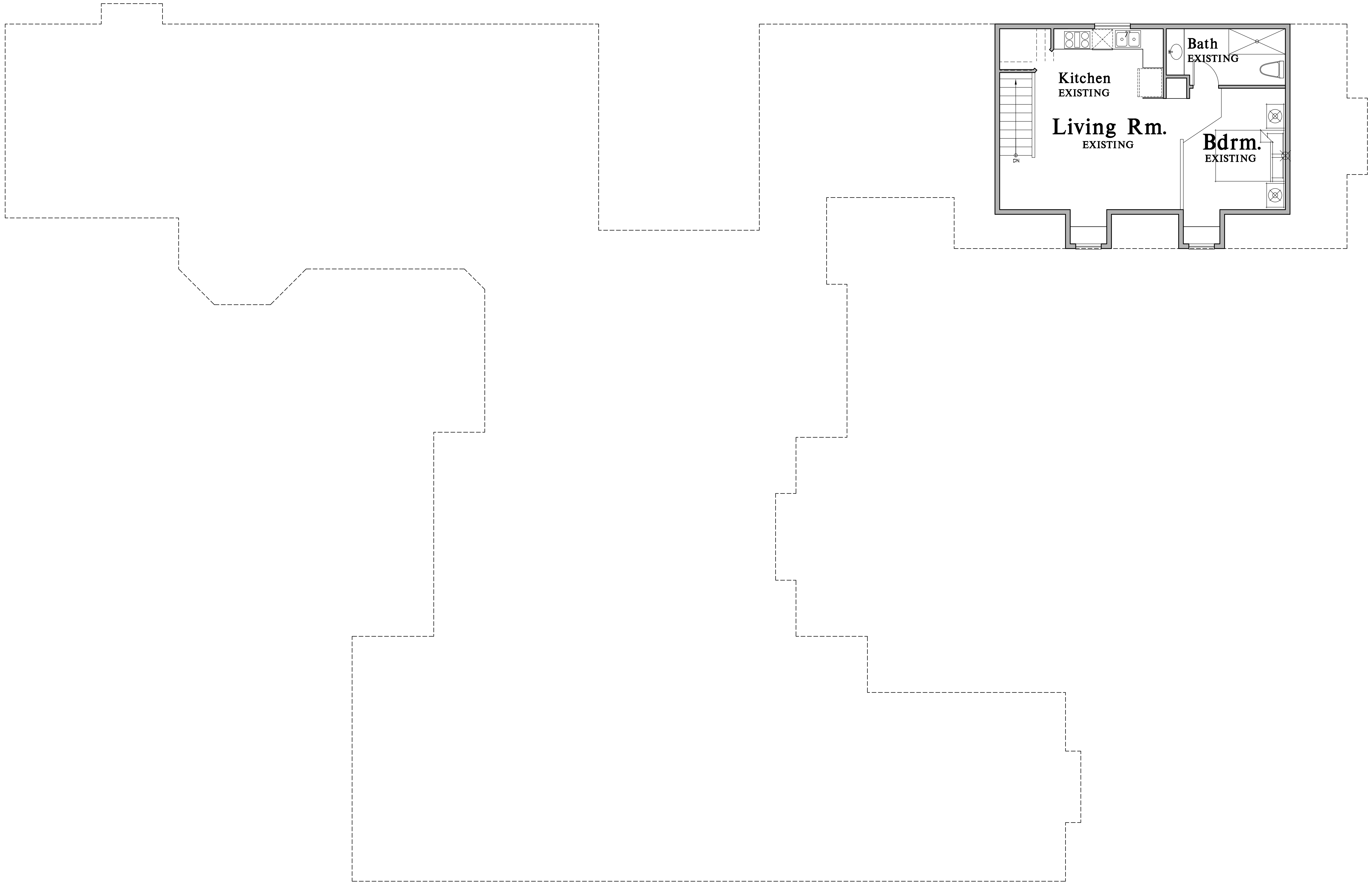
Kitchen
EXISTING
Bath
EXISTING
Living Rm.
EXISTING
Bdrm.
EXISTING
DN

AS-BUILT UPPER FLOOR PLAN

Scale 1/4"=1'-0"

REGISTERED ARCHITECT
5079
JOHN KAPPLER
STATE OF WASHINGTON
ORIGINAL SIGNATURE REQUIRED

Date	By	Description
9/18/23	AG	AS-BUILT DRAWINGS

Lee Remodel

8448 N Mercer Way, Mercer Island, WA

ARCHITECTURAL INNOVATIONS, P.S.
Forward Thinking Design Solutions For Your Environment
14311 SE 16th St
Bellevue, WA 98007
1-800-888-4517
www.kapplerhomeplans.com

TITLE

JOB NO.: 23050.22
STARTING NO.: NA

SHEET

A10

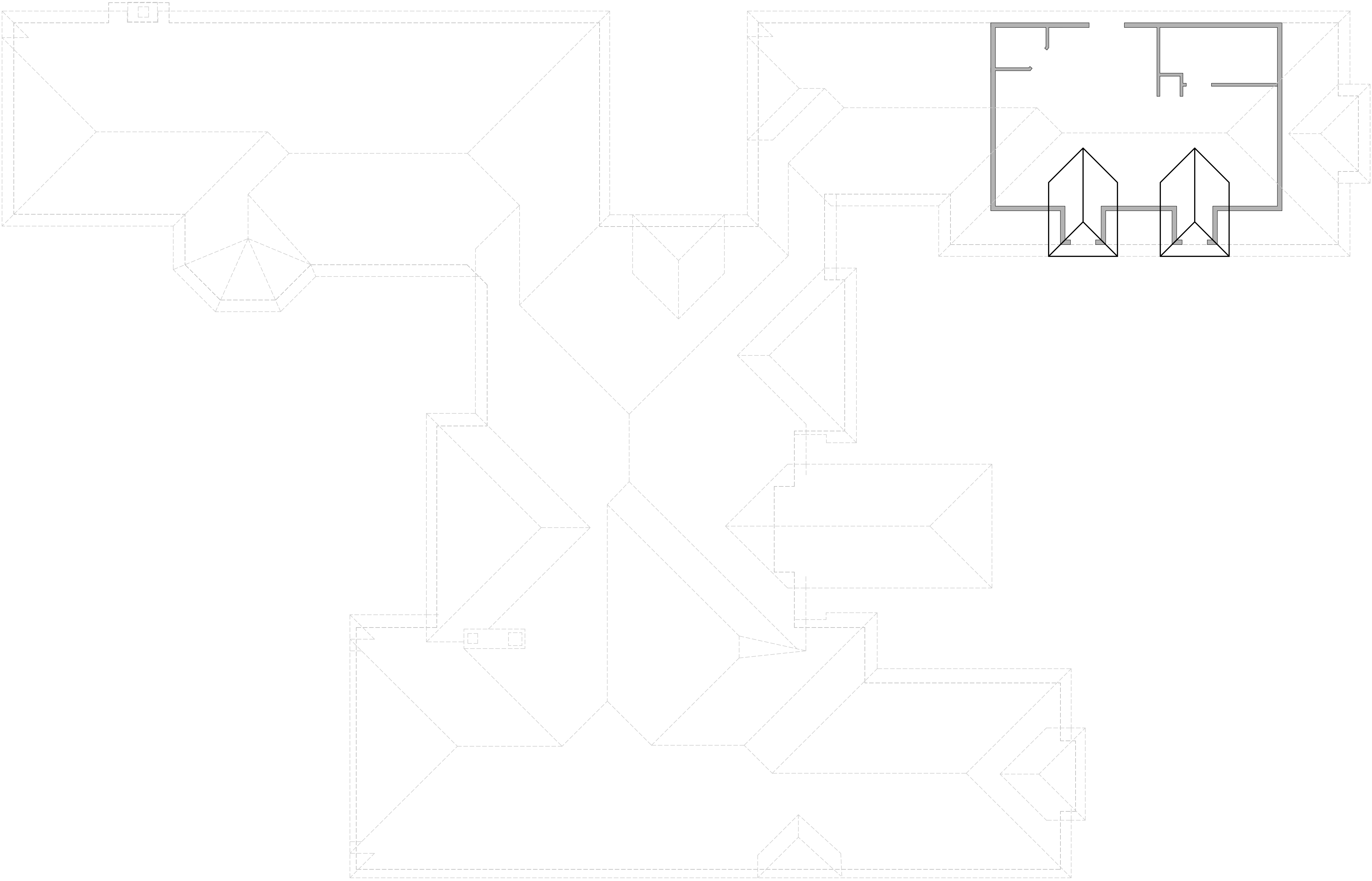

AS-BUILT ROOF PLAN

Scale 1/4"=1'-0"

5079
JOHN KAPPLER
ORIGINAL SIGNATURE REQUIRED

Date	By	Description
9/18/23	AG	AS-BUILT DRAWINGS

Lee Remodel

8448 N Mercer Way, Mercer Island, WA

ARCHITECTURAL INNOVATIONS, P.S.
Forward Thinking Design Solutions For Your Environment
14311 SE 16th St
Bellevue, WA 98007
1-800-888-4517
www.kapplerhomeplans.com

TITLE

JOB NO. : 23050.22
STARTING NO. : NA

SHEET

A11

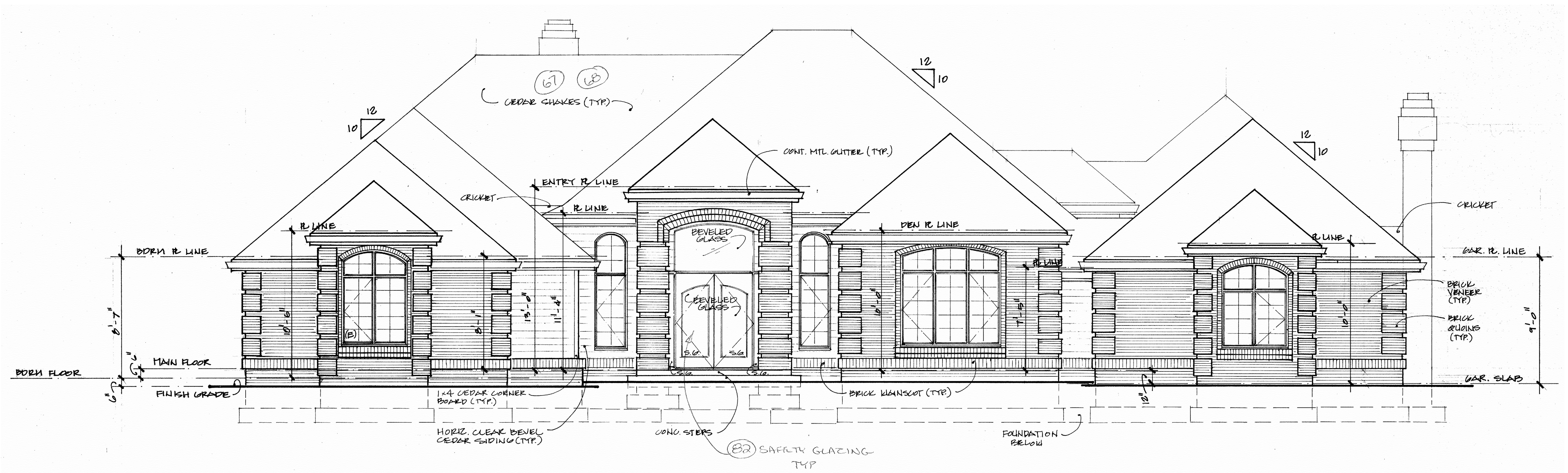
CEDAR SHAKES (TYP)
12
10
CONT. MTL GUTTER (TYP)
ENTRY R LINE
CRICKET
R LINE
BEVELED GLASS
BDRM R LINE
DEN R LINE
GAR. R LINE
BRICK VENEER (TYP)
BRICK QUOINS (TYP)
MAIN FLOOR
BDRM FLOOR
FINISH GRADE
1x4 CEDAR CORNER BOARD (TYP)
HORIZ. CLEAR BEVEL CEDAR SIDING (TYP)
CONC. STEPS
SAFETY GLAZING TYP
BRICK WAINSCOT (TYP)
FOUNDATION BELOW
GAR. SLAB

AS-BUILT SOUTH-WEST ELEVATION

Scale 3/16"=1'-0"

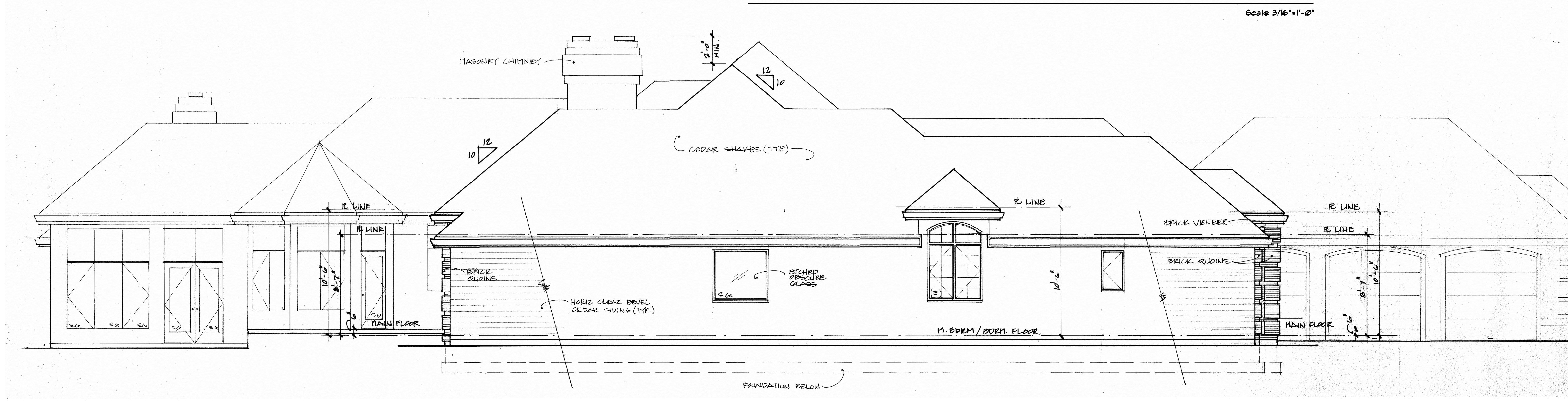
MASONRY CHIMNEY
12
10
CEDAR SHAKES (TYP)
R LINE
BRICK VENEER
BRICK QUOINS
ETCHED OBSCURE GLASS
HORIZ. CLEAR BEVEL CEDAR SIDING (TYP)
M. BDRM/BDRM. FLOOR
MAIN FLOOR
FOUNDATION BELOW

FILE COPY

AS-BUILT NORTH-WEST ELEVATION

Scale 3/16"=1'-0"

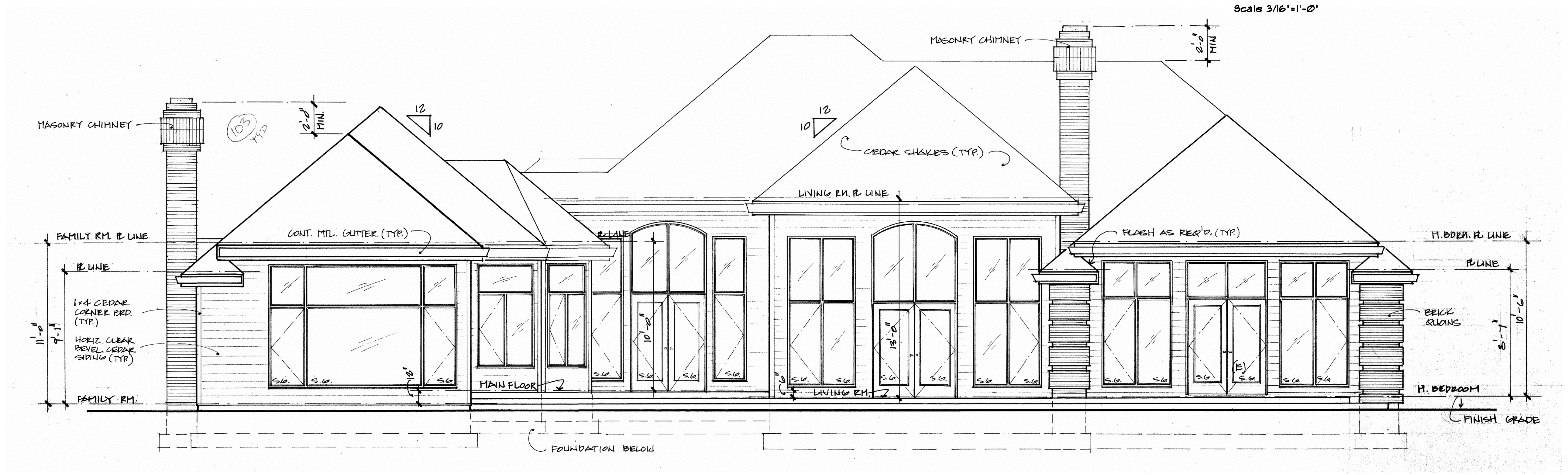
MASONRY CHIMNEY
12
10
CEDAR SHAKES (TYP)
LIVING RM. R LINE
FAMILY RM. R LINE
R LINE
CONT. MTL. GUTTER (TYP)
FLASH AS REQ'D. (TYP)
M. BDRM. R LINE
1x4 CEDAR CORNER BRD (TYP)
HORIZ. CLEAR BEVEL CEDAR SIDING (TYP)
BRICK QUOINS
MAIN FLOOR
FAMILY RM.
LIVING RM.
M. BEDROOM
FINISH GRADE
FOUNDATION BELOW

AS-BUILT NORTH-EAST ELEVATION

Scale 3/16"=1'-0"

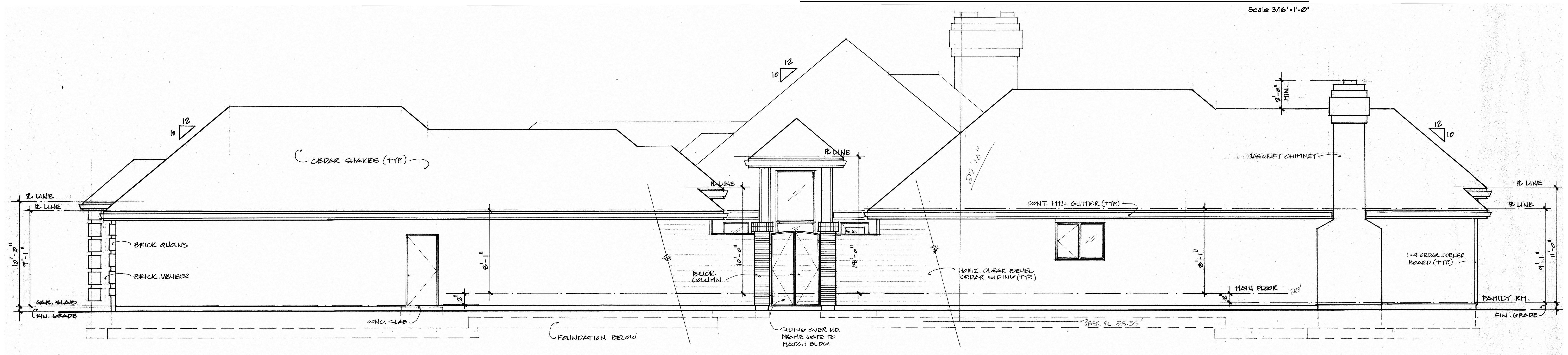
12
10
CEDAR SHAKES (TYP)
R LINE
BRICK QUOINS
BRICK VENEER
GAR. SLAB
FIN. GRADE
CONC. SLAB
FOUNDATION BELOW
BRICK COLUMN
SIDING OVER WD. FRAME CENTER TO MATCH BLDG.
MASONRY CHIMNEY
CONT. MTL. GUTTER (TYP)
HORIZ. CLEAR BEVEL CEDAR SIDING (TYP)
MAIN FLOOR
1x4 CEDAR CORNER BOARD (TYP)
FAMILY RM.
FIN. GRADE

AS-BUILT SOUTH-EAST ELEVATION

Scale 3/16"=1'-0"

5079
REGISTERED ARCHITECT
JOHN KAPPLER
STATE OF WASHINGTON
ORIGINAL SIGNATURE REQUIRED

Date	By	Description
9/18/23	AG	AS-BUILT DRAWINGS

Lee Remodel

8448 N Mercer Way, Mercer Island, WA

ARCHITECTURAL INNOVATIONS, P.S.
Forward Thinking Design Solutions For Your Environment
14311 SE 16th St
Bellevue, WA 98007
1-800-888-4517
www.kapplerhomeplans.com

TITLE

JOB NO. : 23050.22
STARTING NO. : NA

SHEET
A12

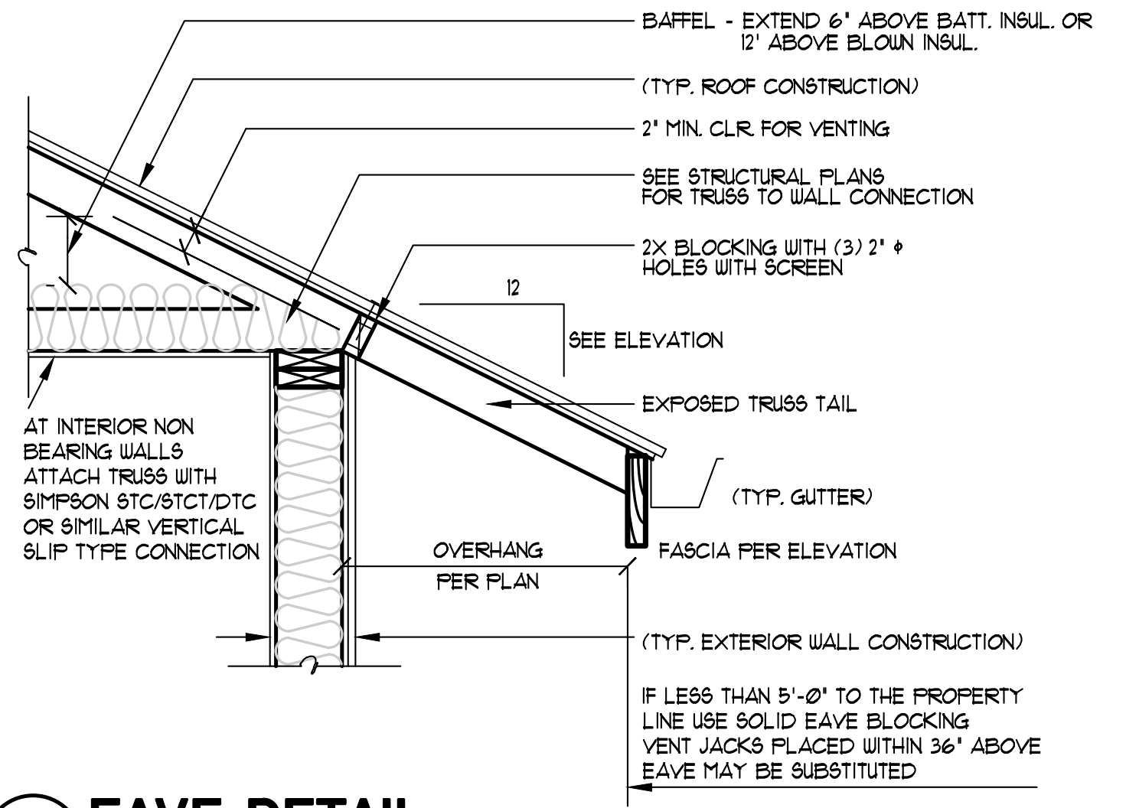
BAFFEL - EXTEND 6" ABOVE BATT. INSUL. OR 12' ABOVE BLOWN INSUL.
(TYP. ROOF CONSTRUCTION)
2" MIN. CLR FOR VENTING
SEE STRUCTURAL PLANS FOR TRUSS TO WALL CONNECTION
2X BLOCKING WITH (3) 2" ϕ HOLES WITH SCREEN
12
SEE ELEVATION
EXPOSED TRUSS TAIL
(TYP. GUTTER)
FASCIA PER ELEVATION
OVERHANG PER PLAN
(TYP. EXTERIOR WALL CONSTRUCTION)
AT INTERIOR NON BEARING WALLS ATTACH TRUSS WITH SIMPSON STC/STCT/DTC OR SIMILAR VERTICAL SLIP TYPE CONNECTION

IF LESS THAN 5'-0" TO THE PROPERTY LINE USE SOLID EAVE BLOCKING VENT JACKS PLACED WITHIN 36" ABOVE EAVE MAY BE SUBSTITUTED

5 EAVE DETAIL
3/4"=1'-0"

06100-07300-61

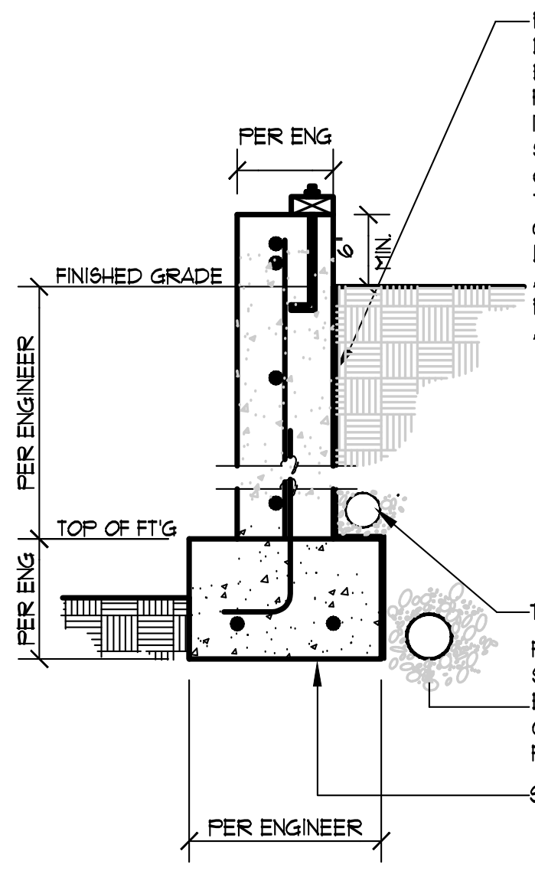
PER ENG
6" MIN.
FINISHED GRADE
PER ENGINEER
TOP OF FT'G
PER ENG
PER ENGINEER
TIGHTLINE
SOLID SUBSTRATE

R406.1 CONCRETE AND MASONRY FOUNDATION DAMPPROOFING. EXCEPT WHERE REQUIRED BY SECTION R406.2 TO BE WATERPROOFED, FND WALLS THAT RETAIN EARTH & ENCLOSE INTERIOR SPACES & FLOORS BELOW GRADE SHALL BE DAMPPROFFED FROM THE HIGHER OF THE TOP OF THE FOOTING OR 6" BELOW THE TOP OF THE BSMT FLOOR TO THE FINISHED GRADE. MASONRY WALLS SHALL HAVE NOT LESS THAN 3/8" PORTLAND CEMENT PARGING APPLIED TO EXTERIOR OF THE WALL. THE PARGING SHALL BE DAMPPROOFED IN ACCORDANCE WITH ONE OF THE FOLLOWING:

1. BITUMINOUS COATING.
2. 3lbs PER SQ YARD OF ACRYLIC MODIFIED CEMENT.
3. 1/8" COAT OF SURFACE-BONDING CEMENT COMPLYING W/ ASTM C 887.
4. ANY MATERIAL PERMITTED FOR WATERPROOFING IN SECTION R406.2
5. OTHER APPROVED METHODS OR MATERIALS

FOUNDATION DRAINAGE 4" SDR 35 OR SCHED. 40 RIDGID PVC PERFORATED PIPE EMBEDDED IN PEA GRAVEL OR CLEAN CRUSHED ROCK AND WRAPPED IN FILTER FABRIC. (DIV. 2 SHEET A-1)

1 DAMP PROOFING DETAIL
3/4"=1'-0"

03300-07100-01

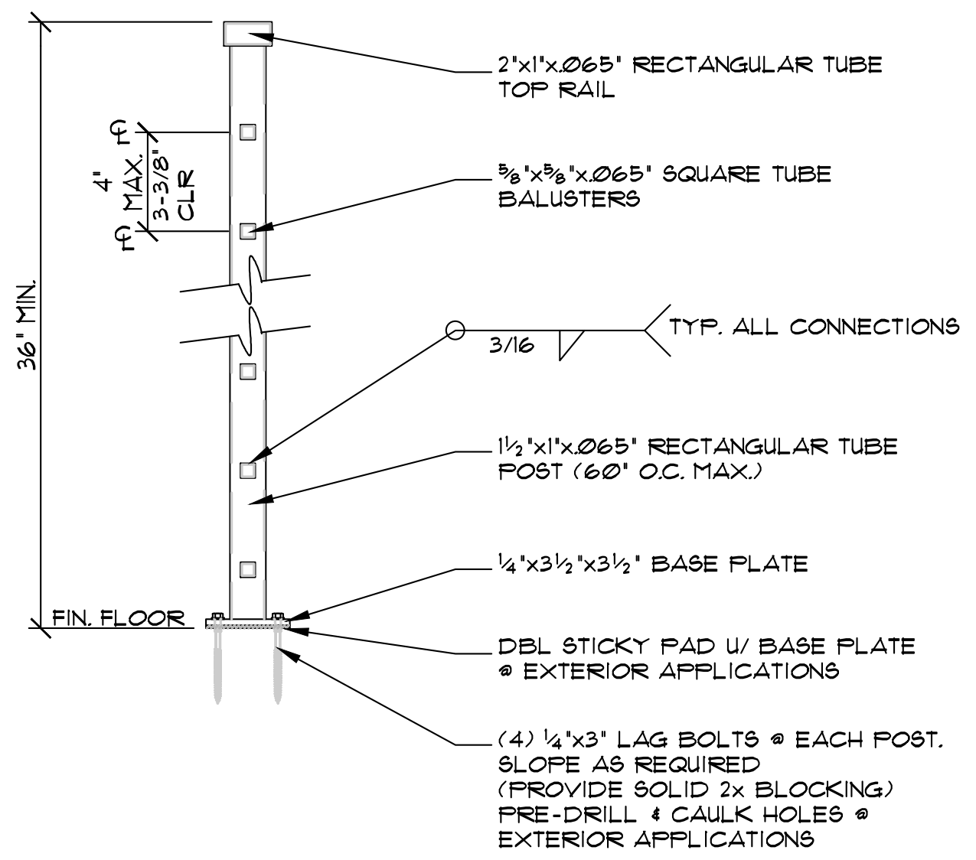
2"x1"x.065" RECTANGULAR TUBE TOP RAIL
5/8"x5/8"x.065" SQUARE TUBE BALUSTERS
4" MAX. ℄ ℄
3-3/8" CLR
36" MIN.
3/16
TYP. ALL CONNECTIONS
1½"x1"x.065" RECTANGULAR TUBE POST (60" O.C. MAX.)
¼"x3½"x3½" BASE PLATE
FIN. FLOOR
DBL STICKY PAD W/ BASE PLATE @ EXTERIOR APPLICATIONS
(4) ¼"x3" LAG BOLTS @ EACH POST. SLOPE AS REQUIRED (PROVIDE SOLID 2x BLOCKING) PRE-DRILL & CAULK HOLES @ EXTERIOR APPLICATIONS

2 TYPICAL GUARD RAIL DETAIL
1 1/2"=1'-0"

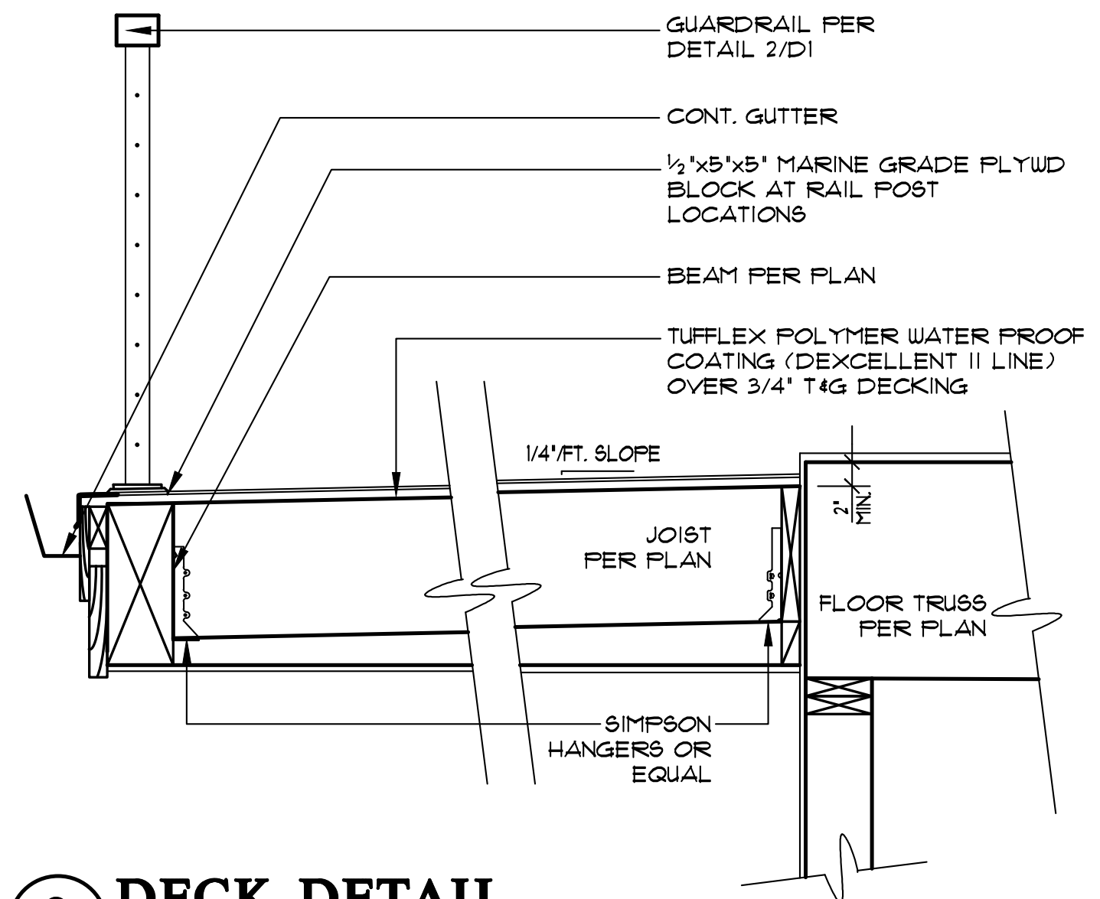
GUARDRAIL PER DETAIL 2/D1
CONT. GUTTER
½"x5"x5" MARINE GRADE PLYWD BLOCK AT RAIL POST LOCATIONS
BEAM PER PLAN
TUFFLEX POLYMER WATER PROOF COATING (DEXCELLENT II LINE) OVER 3/4" T&G DECKING
1/4"/FT. SLOPE
JOIST PER PLAN
2" MIN.
FLOOR TRUSS PER PLAN
SIMPSON HANGERS OR EQUAL

3 DECK DETAIL
3/4"=1'-0"

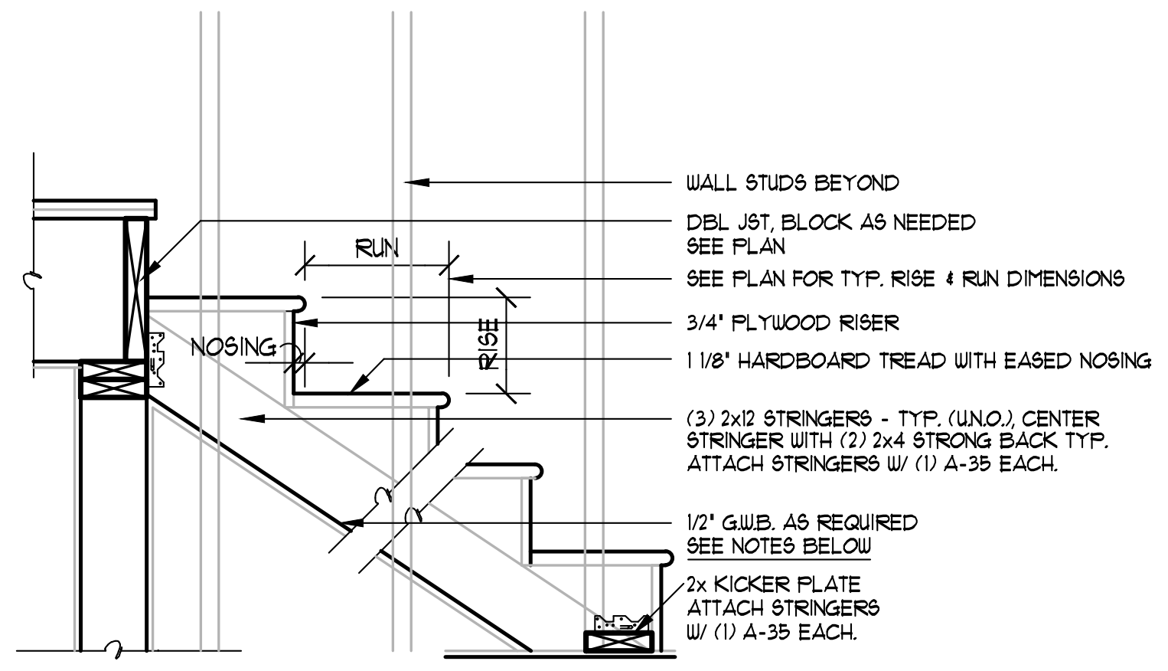
WALL STUDS BEYOND
DBL JST, BLOCK AS NEEDED SEE PLAN
RUN
SEE PLAN FOR TYP. RISE & RUN DIMENSIONS
NOSING
RISE
3/4" PLYWOOD RISER
1 1/8" HARDBOARD TREAD WITH EASED NOSING
(3) 2x12 STRINGERS - TYP. (U.N.O.), CENTER STRINGER WITH (2) 2x4 STRONG BACK TYP. ATTACH STRINGERS W/ (1) A-35 EACH.
1/2" G.W.B. AS REQUIRED SEE NOTES BELOW
2x KICKER PLATE ATTACH STRINGERS W/ (1) A-35 EACH.

1. HEADROOM MIN. 6'-8", WIDTH MIN. 3'-0" PER I.R.C. SECTION R311.7.
2. TREADS 10" MIN. DEPTH FROM LEADING EDGES OF NOSING TO NOSING AND RISERS 7¾" MAX. HEIGHT PER I.R.C. SECTION R311.7.5.
3. HANDRAIL MIN. 34" TO MAX. 38" ABOVE TREAD NOSING. HANDRAIL TYPE 1 CIRCULAR TO HAVE 1 1/4" MIN. TO 2" MAX. CROSS SECTION DIMENSION AND 1 1/2" MIN. CLEAR FROM WALL, RETURN RAIL ENDS. HANDRAILS SHALL BE STRONG ENOUGH TO RESIST A 200 POUND POINT LOAD IN ANY DIRECTION PER I.R.C. TABLE R301.5
4. INSTALL FIRE BLOCKING BETWEEN STRINGERS AT THE TOP AND BOTTOM OF EACH RUN PER I.R.C. SECTION R602.8.
5. COVER USABLE SPACE UNDER STAIR WITH 1/2" G.W.B., PER I.R.C. SECTION R302.7.
6. INTERMEDIATE BALUSTERS SHALL BE SPACED W/ LESS THAN 4" BETWEEN BALUSTERS PER I.R.C. SECTION R312.2.
7. TREAD NOSING TO HAVE A MAX. RADIUS OF 9/16 PROJECT A MIN. 3/4" AND A MAX. OF 1 1/4" ON STAIRS W/ SOLID RISERS. BEVELING OF NOSING NOT TO EXCEED 1/2", PER I.R.C. SECTION R311.5.3.3

4 STAIR SECTION DETAIL
3/4"=1'-0"

06200-06100-01

17

13

9

18

14

10

6

19

15

11

7

20

16

12

8

5079 JOHN KAPPLER

ORIGINAL SIGNATURE REQUIRED

Date	By	Description
9/4/24	AG	PERMIT SET

Lee Remodel

8448 N Mercer Way, Mercer Island, WA

ARCHITECTURAL INNOVATIONS, P.S.
Forward Thinking Design Solutions For Your Environment
14311 SE 16th St
Bellevue, WA 98007
1-800-888-4517
www.kapplerhomeplans.com

TITLE

JOB NO. : 23050.05
STARTING NO. : 23050.03

SHEET

D1

2021 Washington State Energy Code – Residential
Prescriptive Energy Code Compliance for All Climate Zones in Washington
Single Family – New & Additions (effective March 15, 2024)

WASHINGTON STATE UNIVERSITY
Energy Program

Permit#			
Address or Lot & Block			
LEE REMODEL (AI: 23050)			
8448 N MERCER WAY			
City	MERCER ISLAND	Zip	98040

These requirements apply to all the IRC building types, including detached one- and two-family dwellings and multiple single-family dwellings (townhouses).

Instructions: This single-family project uses the requirements of the Prescriptive Path below to incorporate the minimum values listed. Based on the conditioned floor area of the structure, the number of required additional credits must be selected by the permit applicant.

Provide all information from the following tables in building permit drawings: Table R402.1.2 - Insulation and Fenestration Requirements by Component, Table R406.2 - Fuel Normalization Credits and R406.3 Energy Credits.

Authorized Representative Signature	Scott McMillen Digitally signed by Scott McMillen Date: 2024.08.23 13:47:32 -07'00'	**Date**	8-23-2024

All Climate Zones Table 402.1.3		
	R-Value [a]	**U-Factor [a]**
Fenestration U-Factor [b,j]	n/a	0.30
Skylight U-Factor [b]	n/a	0.50
Ceiling [e]	60	n/a
Wood Frame Wall [g,i]	20+5 or 13+10	n/a
Floor	30	n/a
Below Grade Wall [c,h]	10/15/21 int + 5TB	n/a
Slab [d,f] R-Value & Depth	10, 4 ft	n/a

a	R-values are minimums. U-factors and SHGC are maximums. When insulation is installed in a cavity which is less than the label or design thickness of the insulation, the compressed R-value of the insulation from Appendix Table A101.4 shall not be less than the R-value specified in the table
b	The fenestration *U*-factor column excludes skylights.
c	"10/15/21 +5TB" means R-10 continuous insulation on the exterior of the wall, or R-15 continuous insulation on the interior of the wall, or R-21 cavity insulation plus a thermal break between the slab and the basement wall at the interior of the basement wall. "10/15/21 +5TB" shall be permitted to be met with R-13 cavity insulation on the interior of the basement wall plus R-5 continuous insulation on the interior or exterior of the wall. "5TB" means R-5 thermal break between floor slab and basement wall.
d	R-10 continuous insulation is required under heated slab on grade floors. See Section R402.2.9.1.
e	For single rafter- or joist-vaulted ceilings, the insulation may be reduced to R-38 if the full insulation depth extends over the top plate of the exterior wall.
f	R-7.5 continuous insulation installed over an existing slab is deemed to be equivalent to the required perimeter slab insulation when applied to existing slabs complying with Section R503.1.1. If foam plastic is used, it shall meet the requirements for thermal barriers protecting foam plastics.
g	For log structures developed in compliance with Standard ICC 400, log walls shall meet the requirements for climate zone 5 of ICC 400.
h	Int. (intermediate framing) denotes framing and insulation as described in Section A103.2.2 including standard framing 16 inches on center, 78 percent of the wall cavity insulated and headers insulated with a minimum of R-10 insulation.
i	The first value is cavity insulation, the second value is continuous insulation. Therefore, as an example, "R13+10" means R-13 cavity insulation plus R-10 continuous insulation
j	A maximum U-factor of 0.32 shall apply to vertical fenestration products installed in buildings located above 4000 feet in elevation above sea level, or in windborne debris regions where protection of openings is required under Section R301.2.1.2 of the International Residential Code.

2021 Washington State Energy Code – Residential
Prescriptive Energy Code Compliance for All Climate Zones in Washington
Single Family – New & Additions (effective March 15, 2024)

Each dwelling unit ***in a residential building*** shall comply with sufficient options from Table R406.2 (fuel normalization credits) and Table 406.3 (energy credits) to achieve the following minimum number of credits. To claim this credit, the building permit drawings shall specify the option selected and the maximum tested building air leakage, and show the qualifying ventilation system and its control sequence of operation.

1. Small Dwelling Unit: .... **5.0 credits**
   Dwelling units less than 1500 square feet in conditioned floor area with less than 300 square feet of fenestration area. Additions to existing building greater than 500 square feet of heated floor area but less than 1500 square feet.
2. Medium Dwelling Unit: .... **8.0 credits**
   All dwelling units that are not included in #1, #3 or #4.
3. Large Dwelling Unit: ....**9.0 credits**
   Dwelling units exceeding 5000 square feet of conditioned floor area.
4. Dwelling units serving Group R-2 occupancies: .... **6.5 credits**
   Section R401.1 and residential building Section R202 for Group R-2.
5. Additions 150 square feet to 500 square feet: .... **2.0 credits**

The drawings included with the building permit application shall identify which options have been selected and the point value of each option, regardless of whether separate mechanical, plumbing, electrical, or other permits are utilized for the project

Before selecting your credits on this Summary table, review the details in Table 406.3 (Single Family), on page 4.

Table R406.2 ENERGY EQUALIZATION CREDITS			
System Type	**Description of Primary Heating Source**	**Credits - select ONE system type**	
1	For combustion heating equipment meeting minimum federal efficiency standards for the equipment listed in Table C403.3.2(5) or C403.3.2(6)	0	☑
2	For an initial heating system using a heat pump that meets federal standards for the equipment listed in Table C403.3.2(2) and supplemental heating provided by electric resistance or a combustion furnace meeting minimum standards listed in Table C403.3.2(5)b found in the 2021 WSEC- COMMERCIAL ENERGY CODE	1.5	☐
3	For heating system based on electric resistance only (either forced air or Zonal)	0.5	☐
4[c]	For heating system using a heat pump that meets federal standards for the equipment listed in Table C403.3.2(2) or C403.3.2(9) or Air to water heat pump units that are configured to provide both heating and cooling and are rated in accordance with AHRI 550/590	3.0	☐
5	For heating system based on electric resistance with: 1. Inverter-driven ductless mini-split heat pump system installed in the largest zone in the dwelling, or 2. With 2kW or less total installed heating capacity per dwelling	2.0	☐

a. See Section R401.1 and residential building in Section R202 for Group R-2 scope.
b. The gas back-up furnace will operate as fan-only when the heat pump is operating. The heat pump shall operate at all temperatures above 38°F (3.3°C) (or lower). Below that "changeover" temperature, the heat pump would not operate to provide space heating. The gas furnace provides heating below 38°F (3.3°C) (or lower).
c. Additional points for the HVAC system are included in Table R406.3.

2021 Washington State Energy Code – Residential
Prescriptive Energy Code Compliance for All Climate Zones in Washington
Single Family – New & Additions (effective March 15, 2024)

Summary of Table R406.3				
Options	***Energy Credit Option Descriptions***	***Credits – limited to one energy option from each category [d]***		***Comments:***
1.1	Efficient Building Envelope	0.5	☐	
1.2	Efficient Building Envelope	1.0	☑	
1.3	Efficient Building Envelope	1.5	☐	
1.4	Efficient Building Envelope ☐	2.5	☐	
2.1	Air Leakage Control and Efficient Ventilation	1.0	☐	
2.2	Air Leakage Control and Efficient Ventilation	1.5	☐	
2.3	Air Leakage Control and Efficient Ventilation ☑	2.0	☐	
3.1[a]	High Efficiency HVAC	1.0	☑	
3.2[a]	High Efficiency HVAC	0.5	☐	
3.3[a,c,d]	High Efficiency HVAC	0.5	☐	
3.4[a,d]	High Efficiency HVAC	1.5	☐	
3.5[d]	High Efficiency HVAC	1.5	☐	
3.6[a]	High Efficiency HVAC	1.0	☐	
3.7[a,d,e]	High Efficiency HVAC	2.0	☐	
3.8[a,d]	High Efficiency HVAC	1.0	☐	
3.9	High Efficiency HVAC	1.5	☐	
3.10[f]	High Efficiency HVAC ☐	2.5	☐	
3.11[c]	High Efficiency HVAC	0.5	☐	
4.1	High Efficiency HVAC Distribution System	0.5	☐	
5.1	Efficient Water Heating	0.5	☐	
5.2	Efficient Water Heating	0.5	☐	
5.3	Efficient Water Heating	0.5	☐	
5.4	Efficient Water Heating	1.0	☐	
5.5	Efficient Water Heating	1.5	☑	
5.6	Efficient Water Heating	2.0	☐	
5.7	Efficient Water Heating	2.5	☐	
5.8	Efficient Water Heating ☐	2.5	☐	
6.1	Renewable Electric Energy (4.5 credits max)	0.5-4.5	4.5	
7.1	Appliance Package	0.5	☐	

Total Credits 8.0 Calculate Total

a. An alternative heating source sized at a maximum of 0.5 Watts/ft2 (equivalent) of heated floor area or 500 Watts, whichever is bigger, may be installed in the dwelling unit.
b. See Section R401.1 and residential building in Section R202 for Group R-2 scope.
c. Option 3.11 can only be taken with Options 3.1 and 3.3. To qualify to claim Option 3.11 with 3.3, the system shall be a 1-2 speed heat pump system. Variable capacity heat pumps are ineligible from claiming this option.
d. This option may only be claimed if serving System Type 4 or 5 from Table R406.2.
e. Primary living areas include living, dining, kitchen, family rooms, and similar areas.
f Option 3.11 may only be taken with Efficient Water Heating Options 5.1 or 5.2. Equipment sizing for space heating shall be calculated as provided in Section R403.7 with increased capacity to provide a minimum of 75 percent of peak hot water demand or shall be sized in accordance with approved manufacturer's specifications or guidance. Supplementary heat for water heating system shall be in accordance with Section R403.5.7.

Window, Skylight and Door Schedule

Project Information
LEE REMODEL
8448 N MERCER WAY, MERCER ISLAND, WA

Contact Information
ARCHITECTURAL INNOVATIONS
14311 SE 16TH ST., BELLEVUE, WA 98007
425-641-5320

	Ref.	U-factor	Qt.	Width Feet	Inch	Height Feet	Inch	Area	UA
Exempt Swinging Door (24 sq. ft. max.)								0.0	0.00
Exempt Glazed Fenestration (15 sq. ft. max.)								0.0	0.00

Vertical Fenestration (Windows and doors)

Component Description	Ref.	U-factor	Qt.	Width Feet	Inch	Height Feet	Inch	Area	UA
ENTRY (DOOR, COURTYARD)	MILG.	0.30	1	3	6	8	0	28.0	8.40
ENTRY (WINDOW, COURTYARD)	MILG.	0.30	1	4	0	6	6	26.0	7.80
HALLWAY (WINDOW)	MILG.	0.30	1	4	6	5	0	22.5	6.75
HALLWAY (TRANSOM)	MILG.	0.30	1	4	6	2	0	9.0	2.70
STAIRWAY (WINDOW)	MILG.	0.30	1	5	0	10	0	50.0	15.00
STAIRWAY (TRANSOM)	MILG.	0.30	1	5	0	2	0	10.0	3.00
POWDER (WINDOW)	MILG.	0.30	1	1	6	3	0	4.5	1.35
HALL (WINDOW)	MILG.	0.30	1	4	0	6	6	26.0	7.80
HALL (TRANSOM)	MILG.	0.30	1	4	0	2	0	8.0	2.40
HALL (WINDOW)	MILG.	0.30	1	3	6	5	6	19.3	5.78
MEDIA ROOM (WINDOW)	MILG.	0.30	1	5	0	5	6	27.5	8.25
MEDIA ROOM (WINDOW)	MILG.	0.30	1	4	6	5	0	22.5	6.75
MEDIA ROOM (TRANSOM)	MILG.	0.30	1	4	6	2	0	9.0	2.70
MASTER BEDROOM (WINDOW)	MILG.	0.30	1	2	0	5	6	11.0	3.30
MASTER BEDROOM (WINDOW)	MILG.	0.30	1	9	8	5	6	53.2	15.95
MASTER BEDROOM (WINDOW)	MILG.	0.30	4	4	0	5	6	88.0	26.40
MASTER BEDROOM (SLIDING DOOR)	MILG.	0.30	1	12	0	7	3	87.0	26.10
MASTER BATHROOM (WINDOW)	MILG.	0.30	1	6	6	5	6	35.8	10.73
								0.0	0.00
								0.0	0.00
								0.0	0.00
								0.0	0.00
								0.0	0.00
								0.0	0.00
								0.0	0.00
								0.0	0.00
								0.0	0.00
								0.0	0.00
								0.0	0.00
								0.0	0.00
								0.0	0.00
								0.0	0.00
								0.0	0.00
								0.0	0.00
								0.0	0.00
								0.0	0.00
								0.0	0.00
								0.0	0.00
								0.0	0.00
								0.0	0.00
								0.0	0.00
								0.0	0.00

Sum of Vertical Fenestration Area and UA	537.2	161.15
Vertical Fenestration Area Weighted U = UA/Area		0.30

Overhead Glazing (Skylights)

Component Description	Ref.	U-factor	Qt.	Width Feet	Inch	Height Feet	Inch	Area	UA
W.I.C.	MILG.	0.50	1	2	0	2	0	4.0	2.00
								0.0	0.00
								0.0	0.00
								0.0	0.00
								0.0	0.00
								0.0	0.00

Sum of Overhead Glazing Area and UA	4.0	2.00
Overhead Glazing Area Weighted U = UA/Area		0.50
***Total Sum of Fenestration Area and UA** (for heating system sizing calculations)*	541.2	163.15

5079
REGISTERED ARCHITECT
JOHN KAPPLER
STATE OF WASHINGTON
ORIGINAL SIGNATURE REQUIRED

Date	By	Description
9/4/24	AG	PERMIT SET

Lee Remodel

8448 N Mercer Way, Mercer Island, WA

ARCHITECTURAL INNOVATIONS, P.S.
Forward Thinking Design Solutions For Your Environment
14311 SE 16th St
Bellevue, WA 98007
1-800-888-4517
www.kapplerhomeplans.com

TITLE

JOB NO. : 23050.05
STARTING NO. : 23050.03

SHEET
E1

SLAB ON GRADE

4" CONC. SLAB ON GRADE ON 10 MIL VAPOR BARRIER ON 4" MIN. GRANULAR FILL ON 95% COMPACTED FILL/VIRGIN SOIL

GENERAL STRUCTURAL NOTES

FOUNDATION

- DESIGN IS BASED ON 2021 INTERNATIONAL RESIDENTIAL CODE & 2021 INTERNATIONAL EXISTING BUILDING CODE
- DESIGN LOADS:
  SOIL 1,500 PSF ALLOWABLE BEARING
- CONCRETE SHALL ATTAIN THE FOLLOWING MINIMUM COMPRESSIVE STRENGTHS IN 28 DAYS, U.N.O.:
  f'c = 3,000 psi:* .... FOUNDATION WALLS
  3,000 psi:* .... FOOTINGS
  2,500 psi: .... INTERIOR SLABS ON GRADE
  3,500 psi:* .... GARAGE & EXT. SLABS ON GRADE
  fy = 60,000 psi

  * ALL CONCRETE HAS BEEN DESIGNED FOR 2500 PSI, ANYTHING GREATER THAN THIS SPECIFICATION IS FOR WEATHERING ONLY.
- ALL CONCRETE EXPOSED TO THE WEATHER SHALL NOT HAVE LESS THAN 5% OR MORE THAN 7% AIR ENTRAINMENT.
- FOUNDATION WALL DESIGN IS BASED ON BACKFILL SOIL PRESSURE OF 55 PCF AT-REST, 35 PCF ACTIVE & 7H SEISMIC SURCHARGE.
- TYPICAL REINFORCEMENT DETAILS: LAP ALL REBAR 24" MIN.; BEND BARS AND LAP AT CORNERS; PROVIDE 6" HOOK INTO SUPPORTING FOOTINGS WHEN FOOTINGS INTERSECT; PROVIDE 3" MINIMUM COVER AT THE BOTTOM BARS AND 1 1/2" COVER AT THE SIDES.
- FOUNDATION WALLS SHALL BE BRACED, PRIOR TO BACKFILLING, BY EITHER ADEQUATE TEMPORARY BRACING OR INSTALLATION OF FIRST FLOOR DECK.
- ALL FOOTINGS SHALL BEAR BELOW FROST LINE. CONSULT SOILS REPORT/ LOCAL MUNICIPALITY FOR MINIMUM DEPTH BELOW GRADE.
- FOOTINGS AND SLABS ON GRADE SHALL BEAR ON VIRGIN SOIL OR 95% COMPACTED FILL.
- PROVIDE CONTROL JOINTS AT ALL INSIDE CORNERS OF SLAB EDGES, AND OTHER LOCATIONS WHERE SLAB CRACKS ARE LIKELY TO DEVELOP. (15'-0" O.C.)
- FASTEN SILL PLATES TO FOUNDATION WALLS WITH 5/8" DIA. ANCHOR BOLTS w/ MIN. 3"x3"x 1/4" PLATE WASHERS (EDGE OF WASHER TO BE LOCATED WITHIN 1/2" OF EXTERIOR EDGE OF SILL PLATE) PROVIDE A MINIMUM OF 2 ANCHORS PER PLATE, 12" MAXIMUM FROM PLATE ENDS, U.N.O. (SEE FND. DETAILS).
- ALL LUMBER EXPOSED TO WEATHER OR IN CONTACT W/ CONCRETE OR MASONRY FOUNDATION SHALL BE PRESERVATIVE TREATED HEM FIR #2.
- ARCH/BUILDER TO VERIFY ALL DIMENSIONS

" 2021 IRC" - FEB 2023

REFER TO S-0.0 FOR TYPICAL STRUCTURAL NOTES & SCHEDULES

HOLD-DOWN SCHEDULE

SYMBOL	SPECIFICATION
▶ HD-1	SIMPSON HTT5 HOLD-DOWN
▶ HD-5	SIMPSON CS16 STRAP TIE (14" END LENGTH)
▶ HD-6	SIMPSON MSTC40 STRAP TIE (CENTER STRAP ON FLOOR SYSTEM U.N.O.)
▶ HD-7	SIMPSON MSTC66 STRAP TIE (CENTER STRAP ON FLOOR SYSTEM U.N.O.)

DEMOLITION/RENOVATION NOTES

- FRAMING AND FOUNDATION PLANS HAVE BEEN DESIGNED TO BE STRUCTURALLY SOUND UPON COMPLETION OF THE WORK. THE MEANS AND METHODS OF CONSTRUCTION ARE THE RESPONSIBILITY OF THE BUILDER/CONTRACTOR (UNLESS SPECIFICALLY NOTED ON PLANS).
- DURING DEMOLITION AND CONSTRUCTION, IT IS THE BUILDER/CONTRACTOR'S RESPONSIBILITY TO PROVIDE ADEQUATE TEMPORARY SHORING/BRACING OF EXISTING ELEMENTS INTENDED TO REMAIN.
- THE STRUCTURAL PLANS HAVE BEEN PREPARED WITH EXISTING FRAMING/FOUNDATION ASSUMPTIONS AS NOTED ON THE PLANS. IT IS THE BUILDER/CONTRACTOR'S RESPONSIBILITY TO CONTACT M+K STRUCTURAL ENGINEERING IF ACTUAL SITE CONDITIONS VARY FROM WHAT IS DEPICTED ON THE CONSTRUCTION DOCUMENTS.

LOADING AND DESIGN PARAMETERS

GRAVITY DESIGN LOADS:

DEAD LOAD (PSF):

ROOF TRUSS TOP CHORD:	10
ROOF TRUSS BOTTOM CHORD:	7
ROOF RAFTERS :	10
FLOOR TRUSS:	15
FLOOR JOISTS:	10
TILE FLOORS :	10

LIVE LOAD (PSF):

ROOF :	20
RESIDENTIAL LIVING AREAS :	40
RESIDENTIAL SLEEPING AREAS :	30
RESIDENTIAL WOOD DECKS :	60
GARAGE :	50

SNOW LOAD:

GROUND SNOW LOAD (P_g) (PSF) :	25
FLAT ROOF SNOW LOAD (P_f) (PSF) :	25
SNOW EXPOSURE FACTOR (C_e) :	1.1
SNOW LOAD IMPORTANCE FACTOR (I) :	1.0
THERMAL FACTOR (C_t) :	1.2

LATERAL DESIGN LOADS:

WIND LOAD: (IBC 1609)

SPEED (V_{ult}) (MPH) :	100
WIND RISK CATEGORY :	II
IMPORTANCE FACTOR (I_W) :	1.0
EXPOSURE CATEGORY (LONGITUDINAL):	C
EXPOSURE CATEGORY (TRANSVERSE):	B
INTERNAL PRESSURE COEFF. (GC_{pi}) :	±0.18
TOPOGRAPHIC FACTOR (K_{zt}) :	1.0

SEISMIC LOAD: (IBC 1613)

SEISMIC RISK CATEGORY :		II
SEISMIC IMPORTANCE FACTOR (I_e) :		1.0
MAPPED SPECTRAL RESPONSE :		
S_S: 1.39	S_1: 0.484	
SITE CLASS :		D (DEFAULT)
SPECTRAL RESPONSE COEFF. :		
S_{DS}: 1.112	S_{D1}: 0.586	
SEISMIC DESIGN CATEGORY:		D
BASIC SEISMIC-FORCE-RESISTING SYS :		
LIGHT FRAMED WALLS w/ WOOD STRUCTURAL PANELS		
ULTIMATE BASE SHEAR :		
TRANS: 22k	LONG: 22k	
SEISMIC RESPONSE COEFF. (C_s) :		
TRANS: 0.171	LONG: 0.171	
RESPONSE MODIFICATION FACTOR (R) :		
TRANS: 6.5	LONG: 6.5	
ANALYSIS PROCEDURE USED:		
EQUIVALENT LATERAL FORCE		

MEANS & METHODS NOTES

THE STRUCTURE IS DESIGNED TO BE SELF SUPPORTING AND STABLE AFTER THE BUILDING IS FINISHED AND ALL PLAN, DETAIL, AND NOTE SPECIFICATIONS HAVE BEEN COMPLETED. IT IS THE CONTRACTOR'S SOLE RESPONSIBILITY TO DETERMINE THE ERECTION PROCEDURES AND SEQUENCE TO INSURE THE SAFETY OF THE BUILDING AND ITS COMPONENTS DURING CONSTRUCTION. THIS INCLUDES, BUT IS NOT LIMITED TO, THE ADDITION OF NECESSARY SHORING, SHEETING, TEMPORARY BRACING, GUYS, AND TIE-DOWNS. CONTRACTOR SHALL BE RESPONSIBLE FOR ALL SHORING AND BRACING REQUIRED TO STABILIZE AND PROTECT EXISTING AND ADJACENT STRUCTURES AND SYSTEMS DURING COURSE OF DEMOLITION AND CONSTRUCTION OF THE PROJECT.

STRUCTURAL DESIGN AND SPECIFICATIONS ASSUME THAT ALL SUPPORTING AND NON-SUPPORTING ELEMENTS IN CONTACT WITH FLOOR FRAMING ARE LEVEL, INCLUDING, BUT NOT LIMITED TO; FOUNDATIONS, SLABS ON GRADE, BEAMS, WALLS, AND NON-BEARING ELEMENTS. IT IS THE CONTRACTOR'S RESPONSIBILITY TO VERIFY LEVELNESS AND MAKE ADJUSTMENTS AS NECESSARY, INCLUDING CONSIDERATION OF THOSE AREAS THAT MAY BE WITHIN CONTRACTUAL, INDUSTRY, OR WARRANTY TOLERANCES.

ADDITIONAL NOTES FOR TRUSS & I-JOIST MANUFACTURER

ROOF TRUSS, FLOOR TRUSS AND ENGINEERED JOISTS SHALL BE DESIGNED TO MEET THE DIFFERENTIAL DEFLECTION CRITERIA BELOW, UNLESS NOTED OTHERWISE ON PLAN. MULHERN & KULP CANNOT BE HELD RESPONSIBLE FOR ANY STRUCTURAL ISSUES RELATED TO ANY BUILDING COMPONENT IF COMPONENT SHOP DRAWINGS ARE NOT SUBMITTED TO M&K FOR REVIEW PRIOR TO FABRICATION, DELIVERY, OR INSTALLATION.

TRUSSES SHALL BE DESIGNED SO THAT DIFFERENTIAL DEFLECTION BETWEEN ADJACENT PARALLEL TRUSSES OR GIRDER TRUSSES DOES NOT EXCEED THE FOLLOWING:

A. ROOF TRUSSES:
1/4" DEAD LOAD
B. FLOOR TRUSSES, ATTIC TRUSSES, & I-JOISTS:
1/8" DEAD LOAD
C. FLOOR TRUSSES & ATTIC TRUSSES ADJACENT TO FLOOR FRAMING BY OTHERS:
LIMIT ABSOLUTE TRUSS DEFLECTION TO
3/16" DEAD LOAD. (NOT DIFFERENTIAL DEFLECTION)

LATERAL BRACING NOTES

THIS HOME HAS BEEN ENGINEERED TO RESIST LATERAL FORCES RESULTING FROM:
100 MPH WIND SPEED, EXP. B/C
(ASCE 7-16 WIND MAP, PER IRC R301.2.1.1)
RISK CAT. 2 & SEISMIC CAT. D2.

100 MPH WIND IN 2021 IRC MAP

ENGINEERED DESIGN WAS COMPLETED PER 2021 IBC (SECTION 1609 & 1613) & ASCE 7-16, AS PERMITTED BY R301.1.3 OF THE 2021 IRC. ACCORDINGLY, THIS HOME, AS DOCUMENTED AND DETAILED HEREWITHIN, IS ADEQUATE TO RESIST THE CODE REQUIRED LATERAL FORCES, AND DOES NOT NEED TO CONFORM TO THE PRESCRIPTIVE PROVISIONS OF R602.10.

STANDARD EXTERIOR WALL SHEATHING SPECIFICATIONS

(INTERIOR WALL SPECIFICATION WHERE NOTED ON PLANS)

- 7/16" OSB OR 15/32" PLYWOOD:

  FASTEN SHEATHING w/ 2½"x0.131" NAILS @ 6"o.c. AT ALL SUPPORTED PANEL EDGES AND 12" O.C. IN THE PANEL FIELD. ALL SHEATHING SHEET PANEL EDGES SHALL OCCUR OVER WALL FRAMING MEMBERS OR 2x HORIZONTAL BLOCKING SHALL BE PROVIDED TO SUPPORT PANEL EDGE. ALL EXTERIOR WALLS SHALL BE CONSTRUCTED PER THIS SPECIFICATION U.N.O. ON PLANS.

3" o.c. EDGE NAILING

(WHERE NOTED ON PLANS)

- 7/16" OSB OR 15/32" PLYWOOD:

  ONLY AT LOCATIONS INDICATED ON PLANS - SHEATHE WALL SHOWN WITH 7/16" OSB. FASTEN SHEATHING w/ 2½"x0.131" NAILS @ 3" O.C. AT EDGES AND 12" O.C. AT CENTER. ALL SHEATHING SHEET PANEL EDGES SHALL OCCUR OVER WALL FRAMING MEMBERS OR 2x HORIZONTAL BLOCKING SHALL BE PROVIDED TO SUPPORT PANEL EDGE AND 3" O.C. FASTENING.

NOTES:

1. LATERAL ANALYSIS ASSUMES STUD SPACING @ 16" o.c.
2. ALL SHEAR WALLS SHALL HAVE DOUBLE TOP PLATES FASTENED TOGETHER w/ 3"x0.131" NAILS @ 8" O.C. USE (12)3½"x0.135" NAILS AT EACH LAP SPLICE, (6) EACH SIDE OF JOINT (TYP. U.N.O)
3. ALL EXTERIOR WALLS ARE CONTINUOUSLY SHEATHED.
4. ALL INTERIOR SHEAR WALLS AND EXTERIOR WALLS ARE SHEATHED ABOVE AND BELOW OPENINGS.

LEGEND

- ▥ INTERIOR BEARING WALL
- ▭ BEARING WALL ABOVE (B.W.A.), OR SHEARWALL ABOVE (S.W.A.)
- —‑‑— BEAM / HEADER
- ▬ ▬ ▬ INTERIOR SHEAR WALL PANEL OR EXTERIOR SHEAR WALL w/ 3" o.c. EDGE NAILING
- ⁘ AREA OF OVERFRAMING

⅃L METAL HANGER

✳ INDICATES POST ABOVE. PROVIDE SOLID BLOCKING UNDER POST OR JAMB ABOVE.

▶ INDICATES HOLDOWN.

GENERAL STRUCTURAL NOTES

DESIGN PARAMETERS

- DESIGN IS BASED ON 2021 INTERNATIONAL RESIDENTIAL CODE & 2021 INTERNATIONAL EXISTING BUILDING CODE
- WOOD FRAME ENGINEERING IS BASED ON NDS, "NATIONAL DESIGN SPECIFICATION FOR WOOD CONSTRUCTION" - LATEST EDITION.

GENERAL FRAMING

- EXTERIOR BEARING WALLS SHALL BE 2x4 OR 2x6 (AS SHOWN ON PLANS) @ 16" O.C. (W/ DOUBLE TOP PLATE) HEM FIR (HF) "STUD" GRADE LUMBER, OR BETTER, U.N.O.
- INTERIOR BEARING WALLS SHALL BE 2x4 OR 2x6 (AS SHOWN ON PLANS) @ 16" O.C. (W/ DOUBLE TOP PLATE) HEM FIR (HF) "STUD" GRADE LUMBER, OR BETTER, U.N.O.
- ALL NON-BEARING INTERIOR STUD WALLS SHALL BE CONSTRUCTED WITH 2x 'STUD' GRADE MEMBERS SPACED @ 24" O.C. (MAX.)
- ALL WALLS TALLER THEN TYP. PLATE HEIGHT SHALL BE CONSIDERED BALLOON FRAMED & SHALL BE CONSTRUCTED FROM FLOOR TO UNDERSIDE OF FRAMING AT NEXT LEVEL. B.F. WALLS SHALL BE 2x6 HEM FIR (HF) #2 GRADE LUMBER, OR BETTER. U.N.O.
- ALL SHEATHING AND LEDGERS ARE TO BE DIRECTLY APPLIED AND FASTENED TO FRAMING. DO NOT PROVIDE CONTINUOUS INSULATION BETWEEN FRAMING AND SHEATHING/LEDGERS
- ALL HEADERS SHALL BE SUPPORTED BY (1)2x JACK STUD & (1)2x KING STUD, MINIMUM.
  - THE NUMBER OF STUDS SPECIFIED AT A SUPPORT INDICATES THE NUMBER OF JACK STUDS REQUIRED, U.N.O..
- BUILT-UP POSTS SHALL BE 2x4 OR 2x6 HEM FIR (HF) "STUD" GRADE LUMBER, OR BETTER, U.N.O. & SOLID WOOD COLUMNS SHALL BE SPRUCE PINE FIR (SPF) #2 GRADE LUMBER, OR BETTER, U.N.O.
- ALL 2x6 AND LARGER SOLID SAWN BEAMS/HEADERS SHALL BE HEM FIR #2 (HF #2) OR BETTER. ALL 4x6 AND LARGER SOLID SAWN LUMBER SHALL BE DOUG FIR #2 (DF #2) OR BETTER.
- ALL FRAMING LUMBER SHALL BE KILN DRIED TO 15% MC (KD-15).
- ALL TYP. NAIL FASTENER REQUIREMENTS ARE NOTED IN GENERAL NOTES, IN DETAILS, OR ON PLANS. ALL NAILS SPECIFIED ARE MIN DIAMETER AND LENGTH REQUIRED FOR CONNECTION. ALL HANGER NAILS SHALL BE INSTALLED PER MANUFACTURER'S REQUIREMENTS FOR MAX CHARTED CAPACITY. NOTE: HANGERS USE COMMON NAIL DIAMETERS NOT TYPICAL FRAMING GUN NAILS.
- FASTEN ALL BEAMS TO COLUMNS, OR FLUSH BEAMS TO SUPPORTING BEAMS, w/ (4) 3"x0.131" TOENAILS (MIN.), TYP. U.N.O.
- PROVIDE SOLID BLOCKING IN FLOOR SYSTEM UNDER ALL POSTS & HOLD-DOWNS CONTINUOUS TO FOUNDATION/BEARING. BLOCKING TO MATCH POST ABOVE.
- ENGINEERED LUMBER TO MEET OR EXCEED THE FOLLOWING:
  - LSL MEMBERS - Fb=2325 PSI; Fv=310 PSI; E=1.55x10^6 PSI
  - LVL MEMBERS - Fb=2600 PSI; Fv=285 PSI; E=2.0x10^6 PSI
  - GLB MEMBERS - Fb(+)=2400 PSI; Fb(-)=1850 PSI; Fv=265 PSI; E=1.8x10^6 PSI; DF/DF; 24F-V4 (U.N.O)
- ENGINEERED LUMBER POSTS TO MEET OR EXCEED THE FOLLOWING:
  - LVL MEMBERS - Fb=2400 PSI; Fc||=2500 PSI; E=1.8x10^6 PSI
- FACE NAIL MULTI-PLY 2x BEAMS & HEADERS W/ 3-ROWS OF 3"x0.131" NAILS (MIN.) @ 12" O.C. STAGGERED. APPLY NAILING FROM BOTH FACES @ 3-PLY OR MORE CONDITIONS. UTILIZE 2 ROWS OF NAILS FOR 2x6 & 2x8 MEMBERS.
- TRUSS SHOP DWGS SIGNED AND SEALED BY A PROFESSIONAL ENGINEER REGISTERED IN THE STATE OF PROPOSED CONSTRUCTION SHALL BE SUBMITTED TO BUILDING DESIGNER FOR REVIEW AND APPROVAL PRIOR TO FABRICATION OR DELIVERY IN ACCORDANCE WITH TPI-1 2.3.2.3 & 2.3.4.3.
- REFER TO IRC FASTENING SCHEDULE TABLE R602.3(1) FOR ALL CONNECTIONS, TYP. U.N.O.
- BUILDER RESPONSIBLE TO DETERMINE CORROSION-RESISTANCE REQUIREMENTS AND COMPATIBILITY OF HARDWARE, FASTENERS AND CONNECTORS FOR ENVIRONMENTAL EXPOSURE AND IN CONTACT W/ PRESERVATIVE-TREATED WOOD OF ACTUAL FINAL CONDITIONS AND SOURCED MATERIALS. CONTACT LUMBER & HARDWARE SUPPLIERS TO COORD. IN THE ABSENCE OF MANUFACTURER'S RECOMMENDATIONS, NOT LESS THAN ASTM A653, TYPE G185 ZINC-COATED GALVANIZED STEEL, OR EQUIVALENT, SHALL BE USED.

FLOOR FRAMING

- I-JOISTS/TRUSSES SHALL BE DESIGNED BY MANUF. TO MEET OR EXCEED L/480 LIVE LOAD DEFLECTION CRITERIA AND SHALL RUN CONTINUOUS OVER SUPPORTS WHEREVER POSSIBLE. ALL LOADS SHOWN ON PLAN FOR MANUF. DESIGNS ARE ASD LEVEL LOADS, U.N.O. (EXCLUDES STONE/MARBLE OR WET BED CONSTRUCTED FLOORS - CONTACT M&K FOR EXCLUDED DESIGNS).
- ALL METAL I-JOIST/TRUSS HANGERS SHALL BE SPECIFIED BY I-JOIST/TRUSS MANUFACTURER, UNLESS OTHERWISE NOTED.
- 2x FLOOR JOISTS HAVE BEEN DESIGNED TO MEET OR EXCEED L/360 LIVE LOAD DEFLECTION CRITERIA.
- TYPICAL 2x JOIST HANGERS (U.N.O. ON PLANS):
  SINGLE PLY: SIMPSON LUS210
  DOUBLES: SIMPSON LUS210-2
- FLOOR SHEATHING SHALL BE 23/32" A.P.A. RATED 'STURD-I-FLOOR' 24" O.C, EXPOSURE I (OR APPROVED EQUAL) WITH TONGUE AND GROOVE EDGES. FASTEN TO FRAMING MEMBERS W/ GLUE AND 2 ½" x 0.131" NAILS @ 6"o.c. @ PANEL EDGES & @ 12"o.c. FIELD.
- ALL FLUSH CONNECTIONS SHALL BE CONNECTED WITH HANGER APPROPRIATE FOR MEMBER SIZE. U.N.O.
- FASTEN HANGERS TO SINGLE PLY FLUSH BEAMS w/ 1½" LONG NAILS.

ROOF FRAMING

- FASTEN EACH ROOF TRUSS TO TOP PLATE W/ (4) 3"x0.131" TOENAILS (MIN.) & (1) 'SIMPSON' H2.5T CLIP @ ALL BEARING POINTS. PROVIDE (2) 'SIMPSON' H2.5T CLIPS AT 2-PLY GIRDER TRUSSES, (3) 'SIMPSON' H2.5T CLIPS AT 3-PLY GIRDER TRUSSES AT ALL BEARING POINTS.
- FASTEN EACH ROOF RAFTER TO TOP PLATE WITH (1) 'SIMPSON' H2.5T CLIP @ ALL BEARING POINTS.
- ROOF SHEATHING SHALL BE 7/16" A.P.A. RATED SHEATHING 24/16 EXPOSURE I (OR APPROVED EQUAL). FASTEN TO FRAMING MEMBERS w/ 2 ½" x 0.131" NAILS @ 6"o.c. AT PANEL EDGES & @ 6" O.C. AT INTERMEDIATE SUPPORTS. ROOF SHEATHING SHALL EXTEND BELOW ALL INSTANCES OF OVERFRAMING. BLOCKING SHALL BE INSTALLED AS REQUIRED TO LIMIT ROOF SHEATHING SPANS TO 24" MAX.
- ALL METAL HANGERS SHALL BE SPECIFIED BY THE TRUSS MANUFACTURER, UNLESS OTHERWISE NOTED.
- ROOF TRUSS SHOP DRAWINGS & CALCULATIONS SHALL BE DESIGNED FOR UNBALANCED SNOW LOADING PER ASCE 7-16, SECTION 7.6.
- ERECT AND INSTALL ROOF TRUSSES PER WTCA & TPI'S BCSI 1-08 "GUIDE TO GOOD PRACTICE FOR HANDLING, INSTALLING & BRACING OF METAL PLATE CONNECTED WOOD TRUSSES."
- FASTEN OVER-FRAMED TRUSS SETS TO TRUSSES BELOW w/ (2) 3"x0.131" TOENAILS AT EA. TRUSS.
- FASTEN ALL INTERIOR NON-BEARING PARTITION WALLS TO TRUSS BOTTOM CHORD ABOVE WITH SIMPSON STC CLIPS AT 24" o.c. MAX. PROVIDE BLOCKING BETWEEN THE TRUSS BOTTOM CHORDS AS REQUIRED FOR THE PARALLEL CONDITIONS.

" 2021 IRC" - FEB 2023

seal:

NICHOLAS J. MARTIGNETTI
56478

© copyright : MULHERN & KULP Structural Engineering, Inc.

MULHERN+KULP
RESIDENTIAL STRUCTURAL ENGINEERING
7220 Trade Street, Suite 295, San Diego, CA 92121
p 619-650-0010 ▸ mulhernkulp.com

M&K project number: 203-24016
project mgr: NJM
drawn by: MPM
issue date: 08-30-24

REVISIONS:

ARCHITECTURAL INNOVATIONS

STRUCTURAL NOTES

LEE REMODEL
8448 N. MERCER WAY,
MERCER ISLAND, WA

sheet:
S-0.0

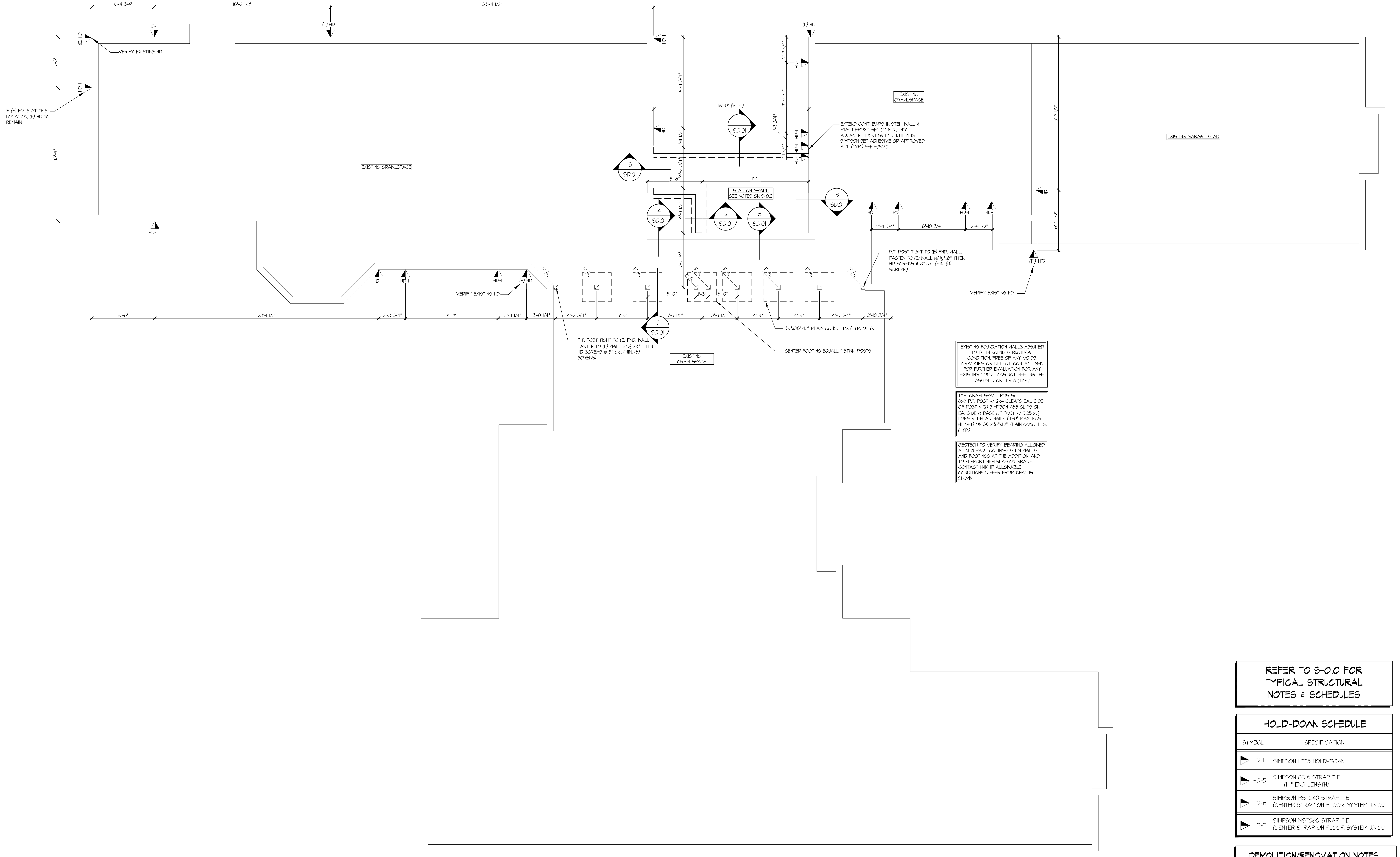
6'-4 3/4"
18'-2 1/2"
33'-4 1/2"
HD-1
(E) HD
5'-3"
13'-9"
EXISTING CRAWLSPACE
9'-4 3/4"
16'-0" (V.I.F.)
2'-7 3/4"
7'-3 1/4"
1'-3 3/4"
1'-1 3/4"
1'-11 1/2"
4'-2 3/4"
5'-8"
11'-0"
4'-7 1/2"
5'-7 1/4"
SLAB ON GRADE
SEE NOTES ON S-0.0
1 SD.01
2 SD.01
3 SD.01
4 SD.01
5 SD.01
EXISTING CRAWLSPACE
EXISTING GARAGE SLAB
15'-9 1/2"
6'-2 1/2"
2'-9 3/4"
6'-10 3/4"
2'-9 1/2"
P.A.
5'-0"
1'-3"
3'-0"
6'-6"
23'-1 1/2"
2'-8 3/4"
9'-7"
2'-11 1/4"
3'-0 1/4"
4'-2 3/4"
5'-3"
5'-7 1/2"
3'-7 1/2"
4'-3"
4'-3"
4'-5 3/4"
2'-10 3/4"
EXISTING CRAWLSPACE

VERIFY EXISTING HD

IF (E) HD IS AT THIS LOCATION, (E) HD TO REMAIN

EXTEND CONT. BARS IN STEM WALL & FTG. & EPOXY SET (4" MIN.) INTO ADJACENT EXISTING FND. UTILIZING SIMPSON SET ADHESIVE OR APPROVED ALT. (TYP.) SEE B/SD.01

P.T. POST TIGHT TO (E) FND. WALL. FASTEN TO (E) WALL w/ ½"x8" TITEN HD SCREWS @ 8" o.c. (MIN. (3) SCREWS)

VERIFY EXISTING HD

VERIFY EXISTING HD

P.T. POST TIGHT TO (E) FND. WALL. FASTEN TO (E) WALL w/ ½"x8" TITEN HD SCREWS @ 8" o.c. (MIN. (3) SCREWS)

36"x36"x12" PLAIN CONC. FTG. (TYP. OF 6)

CENTER FOOTING EQUALLY BTWN. POSTS

EXISTING FOUNDATION WALLS ASSUMED TO BE IN SOUND STRUCTURAL CONDITION, FREE OF ANY VOIDS, CRACKING, OR DEFECT. CONTACT M+K FOR FURTHER EVALUATION FOR ANY EXISTING CONDITIONS NOT MEETING THE ASSUMED CRITERIA (TYP.)

TYP. CRAWLSPACE POSTS:
6x6 P.T. POST w/ 2x4 CLEATS EAL SIDE OF POST & (2) SIMPSON A35 CLIPS ON EA. SIDE @ BASE OF POST w/ 0.25"x1½" LONG REDHEAD NAILS (4'-0" MAX. POST HEIGHT) ON 36"x36"x12" PLAIN CONC. FTG. (TYP.)

GEOTECH TO VERIFY BEARING ALLOWED AT NEW PAD FOOTINGS, STEM WALLS, AND FOOTINGS AT THE ADDITION, AND TO SUPPORT NEW SLAB ON GRADE. CONTACT M&K IF ALLOWABLE CONDITIONS DIFFER FROM WHAT IS SHOWN.

REFER TO S-0.0 FOR TYPICAL STRUCTURAL NOTES & SCHEDULES

HOLD-DOWN SCHEDULE

SYMBOL	SPECIFICATION
▶ HD-1	SIMPSON HTT5 HOLD-DOWN
▶ HD-5	SIMPSON CS16 STRAP TIE (14" END LENGTH)
▶ HD-6	SIMPSON MSTC40 STRAP TIE (CENTER STRAP ON FLOOR SYSTEM U.N.O.)
▶ HD-7	SIMPSON MSTC66 STRAP TIE (CENTER STRAP ON FLOOR SYSTEM U.N.O.)

DEMOLITION/RENOVATION NOTES

- FRAMING AND FOUNDATION PLANS HAVE BEEN DESIGNED TO BE STRUCTURALLY SOUND UPON COMPLETION OF THE WORK. THE MEANS AND METHODS OF CONSTRUCTION ARE THE RESPONSIBILITY OF THE BUILDER/CONTRACTOR (UNLESS SPECIFICALLY NOTED ON PLANS).
- DURING DEMOLITION AND CONSTRUCTION, IT IS THE BUILDER/CONTRACTOR'S RESPONSIBILITY TO PROVIDE ADEQUATE TEMPORARY SHORING/BRACING OF EXISTING ELEMENTS INTENDED TO REMAIN.
- THE STRUCTURAL PLANS HAVE BEEN PREPARED WITH EXISTING FRAMING/FOUNDATION ASSUMPTIONS AS NOTED ON THE PLANS. IT IS THE BUILDER/CONTRACTOR'S RESPONSIBILITY TO CONTACT M+K STRUCTURAL ENGINEERING IF ACTUAL SITE CONDITIONS VARY FROM WHAT IS DEPICTED ON THE CONSTRUCTION DOCUMENTS.

seal:

NICHOLAS J. MARTIGNETTI
56478

MULHERN+KULP
RESIDENTIAL STRUCTURAL ENGINEERING
7220 Trade Street, Suite 295, San Diego, CA 92121
p 619-650-0010 ▸ *mulhernkulp.com*

M&K project number: 203-24016
project mgr: NJM
drawn by: MPM
issue date: 08-30-24

REVISIONS:

ARCHITECTURAL INNOVATIONS

FOUNDATION PLAN

LEE REMODEL
8448 N. MERCER WAY,
MERCER ISLAND, WA

sheet:
S-1.0

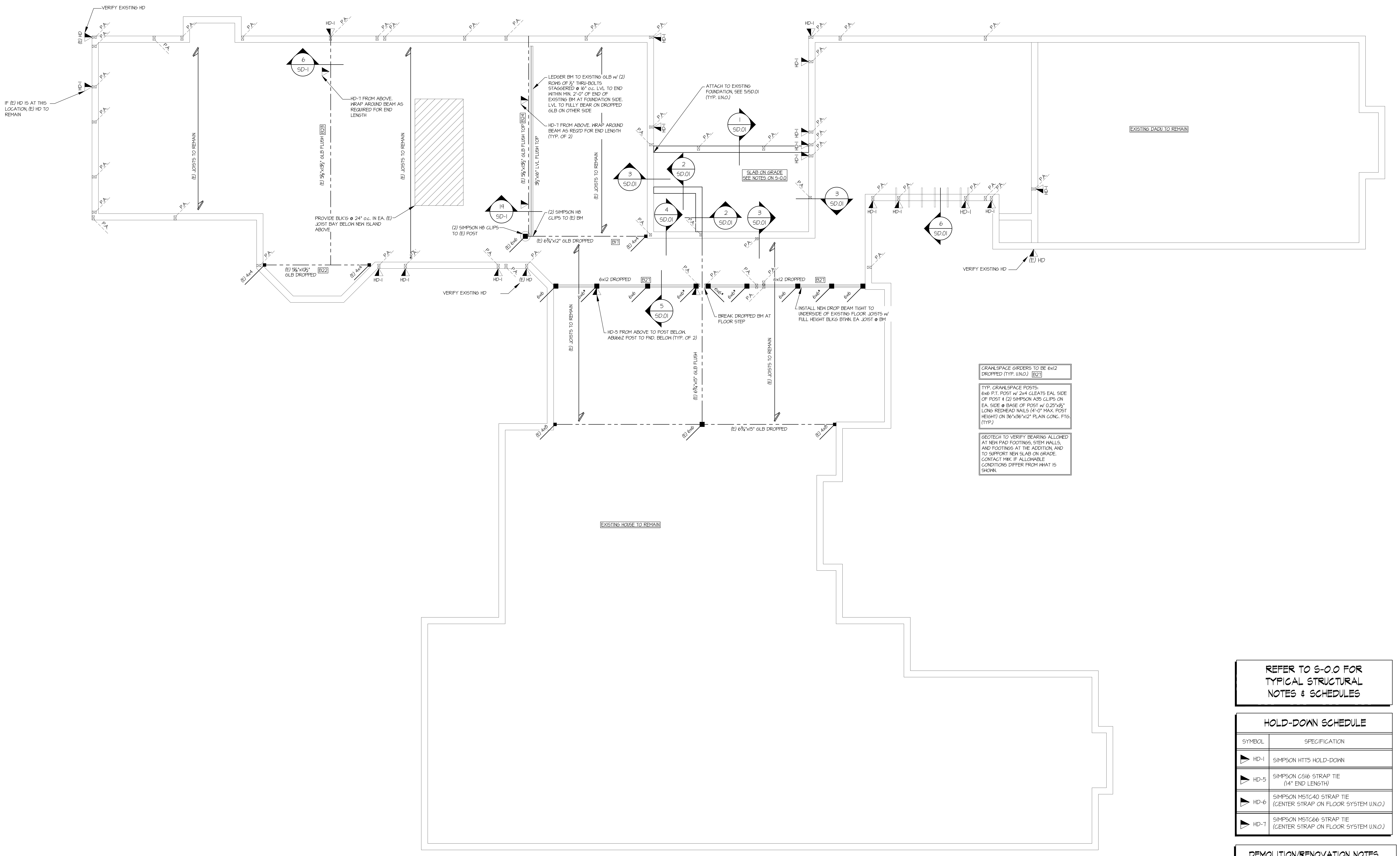
VERIFY EXISTING HD
(E) HD
P.A.
HD-1
IF (E) HD IS AT THIS LOCATION, (E) HD TO REMAIN
(E) JOISTS TO REMAIN
6
SD-1
HD-7 FROM ABOVE. WRAP AROUND BEAM AS REQUIRED FOR END LENGTH
(E) 5⅛"x13½" GLB FLUSH
B23
PROVIDE BLK'G @ 24" o.c. IN EA. (E) JOIST BAY BELOW NEW ISLAND ABOVE
(E) 4x4
(E) 5⅛"x10½" GLB DROPPED
B22
LEDGER BM TO EXISTING GLB w/ (2) ROWS OF ½" THRU-BOLTS STAGGERED @ 16" o.c. LVL TO END WITHIN MIN. 2'-0" OF END OF EXISTING BM AT FOUNDATION SIDE. LVL TO FULLY BEAR ON DROPPED GLB ON OTHER SIDE
HD-7 FROM ABOVE. WRAP AROUND BEAM AS REQ'D FOR END LENGTH (TYP. OF 2)
(E) 5⅛"x13½" GLB FLUSH TOP
B24
3½"x16" LVL FLUSH TOP
19
SD-1
(2) SIMPSON H8 CLIPS TO (E) BM
(2) SIMPSON H8 CLIPS TO (E) POST
(E) 6x6
(E) 6¾"x12" GLB DROPPED
B17
ATTACH TO EXISTING FOUNDATION, SEE 5/SD.01 (TYP. U.N.O.)
1
SD.01
2
SD.01
3
SD.01
4
SD.01
SLAB ON GRADE SEE NOTES ON S-0.0
6
SD.01
EXISTING DADU TO REMAIN
6x6
6x6*
6x12 DROPPED
B27
5
SD.01
HD-5 FROM ABOVE TO POST BELOW. ABU66Z POST TO FND. BELOW (TYP. OF 2)
BREAK DROPPED BM AT FLOOR STEP
INSTALL NEW DROP BEAM TIGHT TO UNDERSIDE OF EXISTING FLOOR JOISTS w/ FULL HEIGHT BLKG BTWN. EA JOIST @ BM
(E) 6¾"x15" GLB FLUSH
(E) 4x8
(E) 6¾"x15" GLB DROPPED
EXISTING HOUSE TO REMAIN

CRAWLSPACE GIRDERS TO BE 6x12 DROPPED (TYP. U.N.O.) B27

TYP. CRAWLSPACE POSTS:
6x6 P.T. POST w/ 2x4 CLEATS EAL SIDE OF POST & (2) SIMPSON A35 CLIPS ON EA. SIDE @ BASE OF POST w/ 0.25"x1½" LONG REDHEAD NAILS (4'-0" MAX. POST HEIGHT) ON 36"x36"x12" PLAIN CONC. FTG. (TYP.)

GEOTECH TO VERIFY BEARING ALLOWED AT NEW PAD FOOTINGS, STEM WALLS, AND FOOTINGS AT THE ADDITION, AND TO SUPPORT NEW SLAB ON GRADE. CONTACT M&K IF ALLOWABLE CONDITIONS DIFFER FROM WHAT IS SHOWN.

REFER TO S-0.0 FOR TYPICAL STRUCTURAL NOTES & SCHEDULES

HOLD-DOWN SCHEDULE

SYMBOL	SPECIFICATION
HD-1	SIMPSON HTT5 HOLD-DOWN
HD-5	SIMPSON CS16 STRAP TIE (14" END LENGTH)
HD-6	SIMPSON MSTC40 STRAP TIE (CENTER STRAP ON FLOOR SYSTEM U.N.O.)
HD-7	SIMPSON MSTC66 STRAP TIE (CENTER STRAP ON FLOOR SYSTEM U.N.O.)

DEMOLITION/RENOVATION NOTES

- FRAMING AND FOUNDATION PLANS HAVE BEEN DESIGNED TO BE STRUCTURALLY SOUND UPON COMPLETION OF THE WORK. THE MEANS AND METHODS OF CONSTRUCTION ARE THE RESPONSIBILITY OF THE BUILDER/CONTRACTOR (UNLESS SPECIFICALLY NOTED ON PLANS).
- DURING DEMOLITION AND CONSTRUCTION, IT IS THE BUILDER/CONTRACTOR'S RESPONSIBILITY TO PROVIDE ADEQUATE TEMPORARY SHORING/BRACING OF EXISTING ELEMENTS INTENDED TO REMAIN.
- THE STRUCTURAL PLANS HAVE BEEN PREPARED WITH EXISTING FRAMING/FOUNDATION ASSUMPTIONS AS NOTED ON THE PLANS. IT IS THE BUILDER/CONTRACTOR'S RESPONSIBILITY TO CONTACT M+K STRUCTURAL ENGINEERING IF ACTUAL SITE CONDITIONS VARY FROM WHAT IS DEPICTED ON THE CONSTRUCTION DOCUMENTS.

seal:

NICHOLAS J. MARTIGNETTI
56478

MULHERN+KULP
RESIDENTIAL STRUCTURAL ENGINEERING
7220 Trade Street, Suite 295, San Diego, CA 92121
p 619-650-0010 ▸ *mulhernkulp.com*

M&K project number: 203-24016

project mgr: NJM
drawn by: MPM
issue date: 08-30-24

REVISIONS:

ARCHITECTURAL INNOVATIONS

STRUCTURAL PLAN

LEE REMODEL
8448 N. MERCER WAY,
MERCER ISLAND, WA

sheet: **S-1.1**

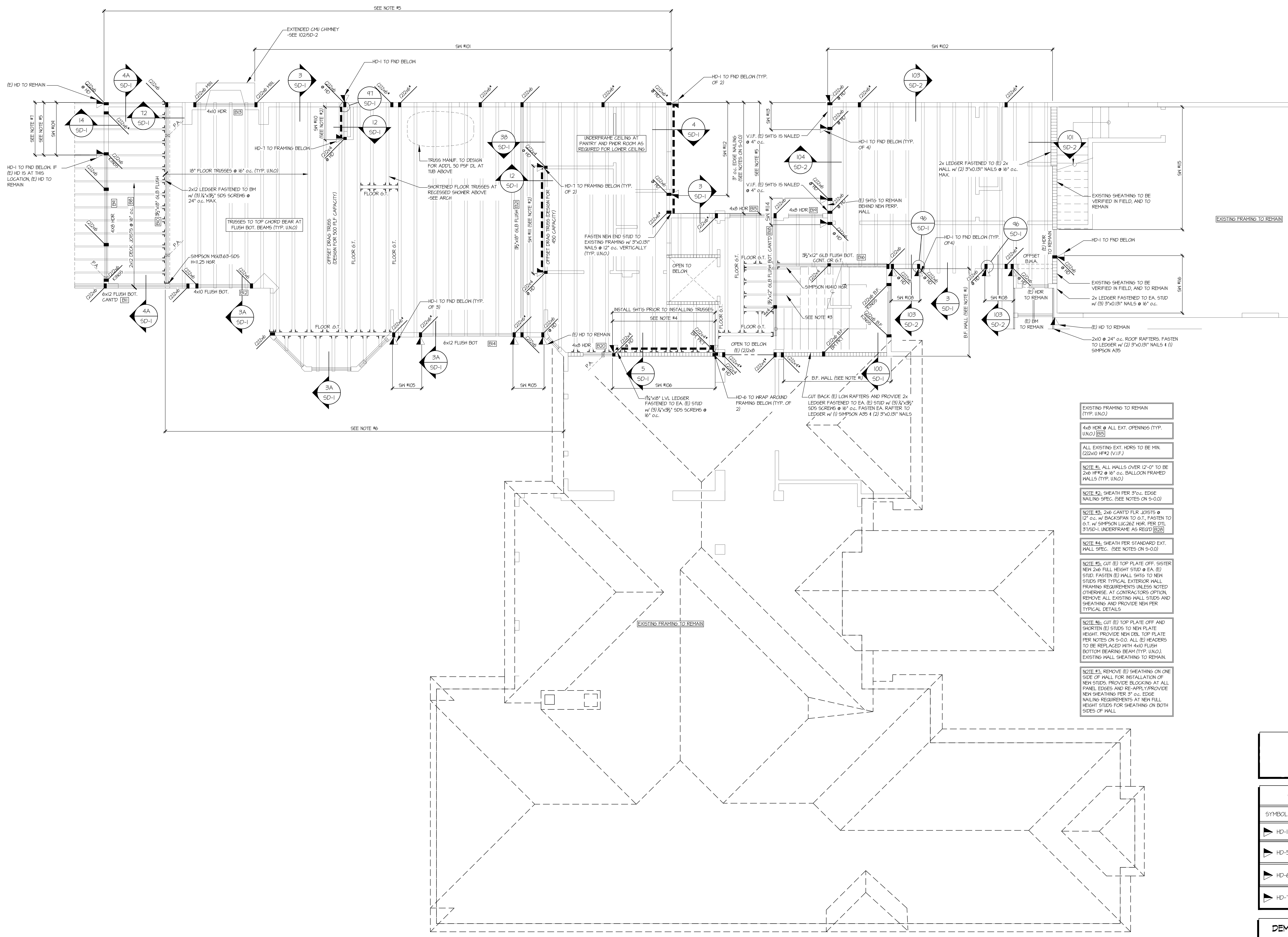
SEE NOTE #5
EXTENDED CMU CHIMNEY -SEE 102/SD-2
SW #101
SW #102
(E) HD TO REMAIN
HD-1 TO FND BELOW. IF (E) HD IS AT THIS LOCATION, (E) HD TO REMAIN
SEE NOTE #7
SEE NOTE #5
SW #109
4A SD-1
14 SD-1
72 SD-1
3 SD-1
97 SD-1
12 SD-1
38 SD-1
4 SD-1
96 SD-1
5 SD-1
100 SD-1
3A SD-1
103 SD-2
104 SD-2
101 SD-2
(2)2x6 @ HD
(2)2x6
(2)2x6*
(2)2x6 MIN.
(2)2x4 @ HD
(2)2x6 KINGS
(2)2x6 B.F. KINGS
(2)2x6 B.F. BM PKT
(2)2x4* BM. PKT
(2)2x4*
4x10 HDR B13
4x8 HDR B9
2x12 DECK JOISTS @ 16" o.c. B8
B10 3½"x18" GLB FLUSH
P.A.
18" FLOOR TRUSSES @ 16" o.c. (TYP. U.N.O)
2x12 LEDGER FASTENED TO BM w/ (3) ¼"x3½" SDS SCREWS @ 24" o.c. MAX.
TRUSSES TO TOP CHORD BEAR AT FLUSH BOT. BEAMS (TYP. U.N.O)
SIMPSON MGU3.63-SDS H=11.25 HGR
6x12 FLUSH BOT. CANT'D B11
4x10 FLUSH BOT. B12
OFFSET DRAG TRUSS (DESIGN FOR 500 PLF CAPACITY)
FLOOR G.T.
FLOOR .G.T.
SW #110 (SEE NOTE #2)
HD-7 TO FRAMING BELOW
HD-1 TO FND BELOW
TRUSS MANUF. TO DESIGN FOR ADD'L 50 PSF DL AT TUB ABOVE
SHORTENED FLOOR TRUSSES AT RECESSED SHOWER ABOVE -SEE ARCH
UNDERFRAME CEILING AT PANTRY AND PWDR ROOM AS REQUIRED FOR LOWER CEILING
HD-7 TO FRAMING BELOW (TYP. OF 2)
3½"x18" GLB FLUSH B21
SW #111 (SEE NOTE #2)
OFFSET DRAG TRUSS (DESIGN FOR 450 CAPACITY)
FASTEN NEW END STUD TO EXISTING FRAMING w/ 3"x0.131" NAILS @ 12" o.c. VERTICALLY (TYP. U.N.O.)
HD-1 TO FND BELOW (TYP. OF 3)
6x12 FLUSH BOT B14
SW #105
SEE NOTE #6
(E) HD TO REMAIN
4x8 HDR B20
INSTALL SHT'G PRIOR TO INSTALLING TRUSSES
SEE NOTE #4
SW #106
1¾"x18" LVL LEDGER FASTENED TO EA. (E) STUD w/ (3) ¼"x3½" SDS SCREWS @ 16" o.c.
HD-6 TO WRAP AROUND FRAMING BELOW (TYP. OF 2)
OPEN TO BELOW
OPEN TO BELOW (E) (2)2x8
HD-1 TO FND BELOW (TYP. OF 2)
SW #112
3" o.c. EDGE NAILING (SEE NOTES ON S-0.0)
SEE NOTE #5
SW #113
V.I.F. (E) SHT'G IS NAILED @ 4" o.c.
HD-1 TO FND BELOW (TYP. OF 4)
V.I.F. (E) SHT'G IS NAILED @ 4" o.c.
(E) SHTG TO REMAIN BEHIND NEW PERP. WALL
4x8 HDR B15
SW #114
4x8 HDR B19
3½"x12" GLB FLUSH BOT. CANT'D B18
3½"x12" GLB FLUSH BOT. CONT. OR G.T. B16
SIMPSON HU410 HGR
SEE NOTE #3
SW #108
B.F. WALL (SEE NOTE #1)
CUT BACK (E) LOW RAFTERS AND PROVIDE 2x LEDGER FASTENED TO EA. (E) STUD w/ (3) ¼"x3½" SDS SCREWS @ 16" o.c. FASTEN EA. RAFTER TO LEDGER w/ (1) SIMPSON A35 & (2) 3"x0.131" NAILS
2x LEDGER FASTENED TO (E) 2x WALL w/ (2) 3"x0.131" NAILS @ 16" o.c. MAX.
HD-1 TO FND BELOW (TYP. OF4)
EXISTING SHEATHING TO BE VERIFIED IN FIELD, AND TO REMAIN
SW #115
EXISTING FRAMING TO REMAIN
HD-1 TO FND BELOW
OFFSET B.W.A.
(E) HDR TO REMAIN
EXISTING SHEATHING TO BE VERIFIED IN FIELD, AND TO REMAIN
2x LEDGER FASTENED TO EA. STUD w/ (3) 3"x0.131" NAILS @ 16" o.c.
SW #116
(E) BM TO REMAIN
(E) HD TO REMAIN
2x10 @ 24" o.c. ROOF RAFTERS. FASTEN TO LEDGER w/ (2) 3"x0.131" NAILS & (1) SIMPSON A35
EXISTING FRAMING TO REMAIN

EXISTING FRAMING TO REMAIN (TYP. U.N.O.)

4x8 HDR @ ALL EXT. OPENINGS (TYP. U.N.O.) B15

ALL EXISTING EXT. HDRS TO BE MIN. (2)2x10 HF#2 (V.I.F.)

NOTE #1: ALL WALLS OVER 12'-0" TO BE 2x6 HF#2 @ 16" o.c. BALLOON FRAMED WALLS (TYP. U.N.O.)

NOTE #2: SHEATH PER 3"o.c. EDGE NAILING SPEC. (SEE NOTES ON S-0.0)

NOTE #3: 2x6 CANT'D FLR JOISTS @ 12" o.c. w/ BACKSPAN TO G.T., FASTEN TO G.T. w/ SIMPSON LUC26Z HGR. PER DTL 37/SD-1. UNDERFRAME AS REQ'D B28

NOTE #4: SHEATH PER STANDARD EXT. WALL SPEC. (SEE NOTES ON S-0.0)

NOTE #5: CUT (E) TOP PLATE OFF. SISTER NEW 2x6 FULL HEIGHT STUD @ EA. (E) STUD. FASTEN (E) WALL SHTG TO NEW STUDS PER TYPICAL EXTERIOR WALL FRAMING REQUIREMENTS UNLESS NOTED OTHERWISE. AT CONTRACTORS OPTION, REMOVE ALL EXISTING WALL STUDS AND SHEATHING AND PROVIDE NEW PER TYPICAL DETAILS

NOTE #6: CUT (E) TOP PLATE OFF AND SHORTEN (E) STUDS TO NEW PLATE HEIGHT. PROVIDE NEW DBL TOP PLATE PER NOTES ON S-0.0. ALL (E) HEADERS TO BE REPLACED WITH 4x10 FLUSH BOTTOM BEARING BEAM (TYP. U.N.O.). EXISTING WALL SHEATHING TO REMAIN.

NOTE #7: REMOVE (E) SHEATHING ON ONE SIDE OF WALL FOR INSTALLATION OF NEW STUDS. PROVIDE BLOCKING AT ALL PANEL EDGES AND RE-APPLY/PROVIDE NEW SHEATHING PER 3" o.c. EDGE NAILING REQUIREMENTS AT NEW FULL HEIGHT STUDS FOR SHEATHING ON BOTH SIDES OF WALL

REFER TO S-0.0 FOR TYPICAL STRUCTURAL NOTES & SCHEDULES

HOLD-DOWN SCHEDULE

SYMBOL	SPECIFICATION
HD-1	SIMPSON HTT5 HOLD-DOWN
HD-5	SIMPSON CS16 STRAP TIE (14" END LENGTH)
HD-6	SIMPSON MSTC40 STRAP TIE (CENTER STRAP ON FLOOR SYSTEM U.N.O.)
HD-7	SIMPSON MSTC66 STRAP TIE (CENTER STRAP ON FLOOR SYSTEM U.N.O.)

DEMOLITION/RENOVATION NOTES

- FRAMING AND FOUNDATION PLANS HAVE BEEN DESIGNED TO BE STRUCTURALLY SOUND UPON COMPLETION OF THE WORK. THE MEANS AND METHODS OF CONSTRUCTION ARE THE RESPONSIBILITY OF THE BUILDER/CONTRACTOR (UNLESS SPECIFICALLY NOTED ON PLANS).
- DURING DEMOLITION AND CONSTRUCTION, IT IS THE BUILDER/CONTRACTOR'S RESPONSIBILITY TO PROVIDE ADEQUATE TEMPORARY SHORING/BRACING OF EXISTING ELEMENTS INTENDED TO REMAIN.
- THE STRUCTURAL PLANS HAVE BEEN PREPARED WITH EXISTING FRAMING/FOUNDATION ASSUMPTIONS AS NOTED ON THE PLANS. IT IS THE BUILDER/CONTRACTOR'S RESPONSIBILITY TO CONTACT M+K STRUCTURAL ENGINEERING IF ACTUAL SITE CONDITIONS VARY FROM WHAT IS DEPICTED ON THE CONSTRUCTION DOCUMENTS.

seal:

NICHOLAS J. MARTIGNETTI
56478

MULHERN+KULP
RESIDENTIAL STRUCTURAL ENGINEERING
7220 Trade Street, Suite 295, San Diego, CA 92121
p 619-650-0010 ▸ *mulhernkulp.com*

M&K project number: 203-24016
project mgr: NJM
drawn by: MPM
issue date: 08-30-24
REVISIONS:

ARCHITECTURAL INNOVATIONS

STRUCTURAL PLAN

LEE REMODEL
8448 N. MERCER WAY,
MERCER ISLAND, WA

sheet: **S-2.0**

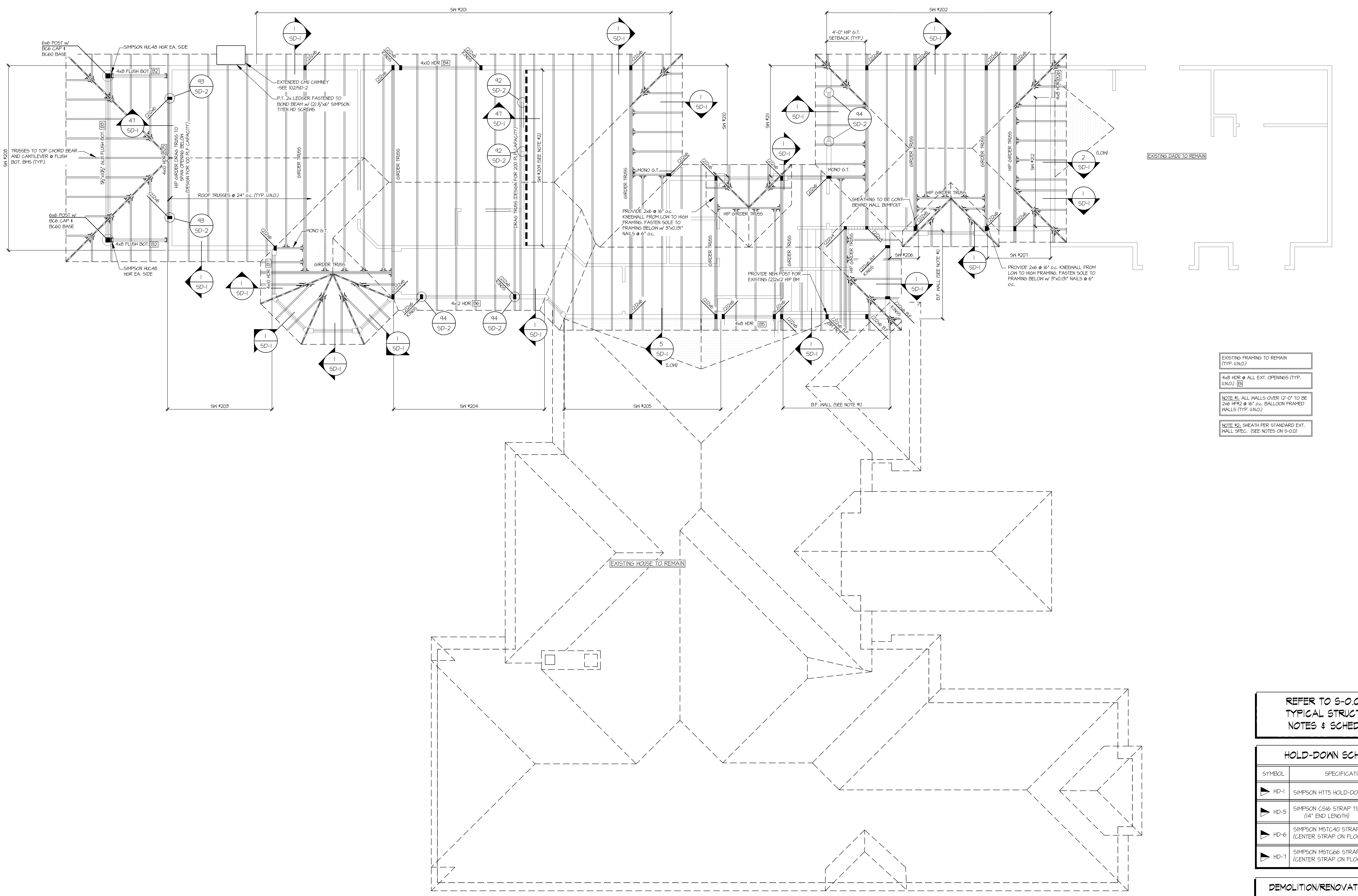
SW #201
SW #202
SW #203
SW #204
SW #205
SW #206
SW #207
SW #208
SW #209 (SEE NOTE #2)
SW #210
SW #211
SW #212
6x6 POST w/ BC6 CAP & BC60 BASE
SIMPSON HUC48 HGR EA. SIDE
4x8 FLUSH BOT. B2
5½"x10½" GLB FLUSH BOT. B3
4x10 HDR B25
TRUSSES TO TOP CHORD BEAR AND CANTILEVER @ FLUSH BOT. BMS (TYP.)
HIP GIRDER DRAG TRUSS TO SPAN OPENING BELOW (DESIGN FOR 100 PLF CAPACITY)
ROOF TRUSSES @ 24" o.c. (TYP. U.N.O.)
EXTENDED CMU CHIMNEY -SEE 102/SD-2
P.T. 2x LEDGER FASTENED TO BOND BEAM w/ (2) ½"x6" SIMPSON TITEN HD SCREWS
4x10 HDR B4
4x10 HDR B7
4x12 HDR B6
4x8 HDR B5
4x8 HDR B26
(2)2x6
(2)2x6 KINGS
(2)2x4
(2)2x6 B.F.
(2)2x6 B.F. KINGS
BM PKT
GIRDER TRUSS
MONO G.T.
HIP GIRDER TRUSS
DRAG TRUSS (DESIGN FOR 200 PLF CAPACITY)
PROVIDE 2x6 @ 16" o.c. KNEEWALL FROM LOW TO HIGH FRAMING. FASTEN SOLE TO FRAMING BELOW w/ 3"x0.131" NAILS @ 6" o.c.
PROVIDE NEW POST FOR EXISTING (2)2x12 HIP BM
4'-0" HIP G.T. SETBACK (TYP.)
SHEATHING TO BE CONT. BEHIND WALL BUMPOUT
B.F. WALL (SEE NOTE #1)
EXISTING DADU TO REMAIN
EXISTING HOUSE TO REMAIN
1 SD-1
47 SD-1
5 SD-1 (LOW)
2 SD-1 (LOW)
92 SD-2
93 SD-2
94 SD-2

EXISTING FRAMING TO REMAIN (TYP. U.N.O.)

4x8 HDR @ ALL EXT. OPENINGS (TYP. U.N.O.) B1

NOTE #1: ALL WALLS OVER 12'-0" TO BE 2x6 HF#2 @ 16" o.c. BALLOON FRAMED WALLS (TYP. U.N.O.)

NOTE #2: SHEATH PER STANDARD EXT. WALL SPEC. (SEE NOTES ON S-0.0)

REFER TO S-0.0 FOR TYPICAL STRUCTURAL NOTES & SCHEDULES

HOLD-DOWN SCHEDULE

SYMBOL	SPECIFICATION
▶ HD-1	SIMPSON HTT5 HOLD-DOWN
▶ HD-5	SIMPSON CS16 STRAP TIE (14" END LENGTH)
▶ HD-6	SIMPSON MSTC40 STRAP TIE (CENTER STRAP ON FLOOR SYSTEM U.N.O.)
▶ HD-7	SIMPSON MSTC66 STRAP TIE (CENTER STRAP ON FLOOR SYSTEM U.N.O.)

DEMOLITION/RENOVATION NOTES

- FRAMING AND FOUNDATION PLANS HAVE BEEN DESIGNED TO BE STRUCTURALLY SOUND UPON COMPLETION OF THE WORK. THE MEANS AND METHODS OF CONSTRUCTION ARE THE RESPONSIBILITY OF THE BUILDER/CONTRACTOR (UNLESS SPECIFICALLY NOTED ON PLANS).
- DURING DEMOLITION AND CONSTRUCTION, IT IS THE BUILDER/CONTRACTOR'S RESPONSIBILITY TO PROVIDE ADEQUATE TEMPORARY SHORING/BRACING OF EXISTING ELEMENTS INTENDED TO REMAIN.
- THE STRUCTURAL PLANS HAVE BEEN PREPARED WITH EXISTING FRAMING/FOUNDATION ASSUMPTIONS AS NOTED ON THE PLANS. IT IS THE BUILDER/CONTRACTOR'S RESPONSIBILITY TO CONTACT M+K STRUCTURAL ENGINEERING IF ACTUAL SITE CONDITIONS VARY FROM WHAT IS DEPICTED ON THE CONSTRUCTION DOCUMENTS.

seal:

Nicholas J. Martignetti
56478

MULHERN+KULP
RESIDENTIAL STRUCTURAL ENGINEERING
7220 Trade Street, Suite 295, San Diego, CA 92121
p 619-650-0010 ▸ *mulhernkulp.com*

M&K project number: 203-24016

project mgr: NJM
drawn by: MPM
issue date: 08-30-24

REVISIONS:

ARCHITECTURAL
INNOVATIONS

STRUCTURAL PLAN

LEE REMODEL
8448 N. MERCER WAY,
MERCER ISLAND, WA

sheet: **S-3.0**

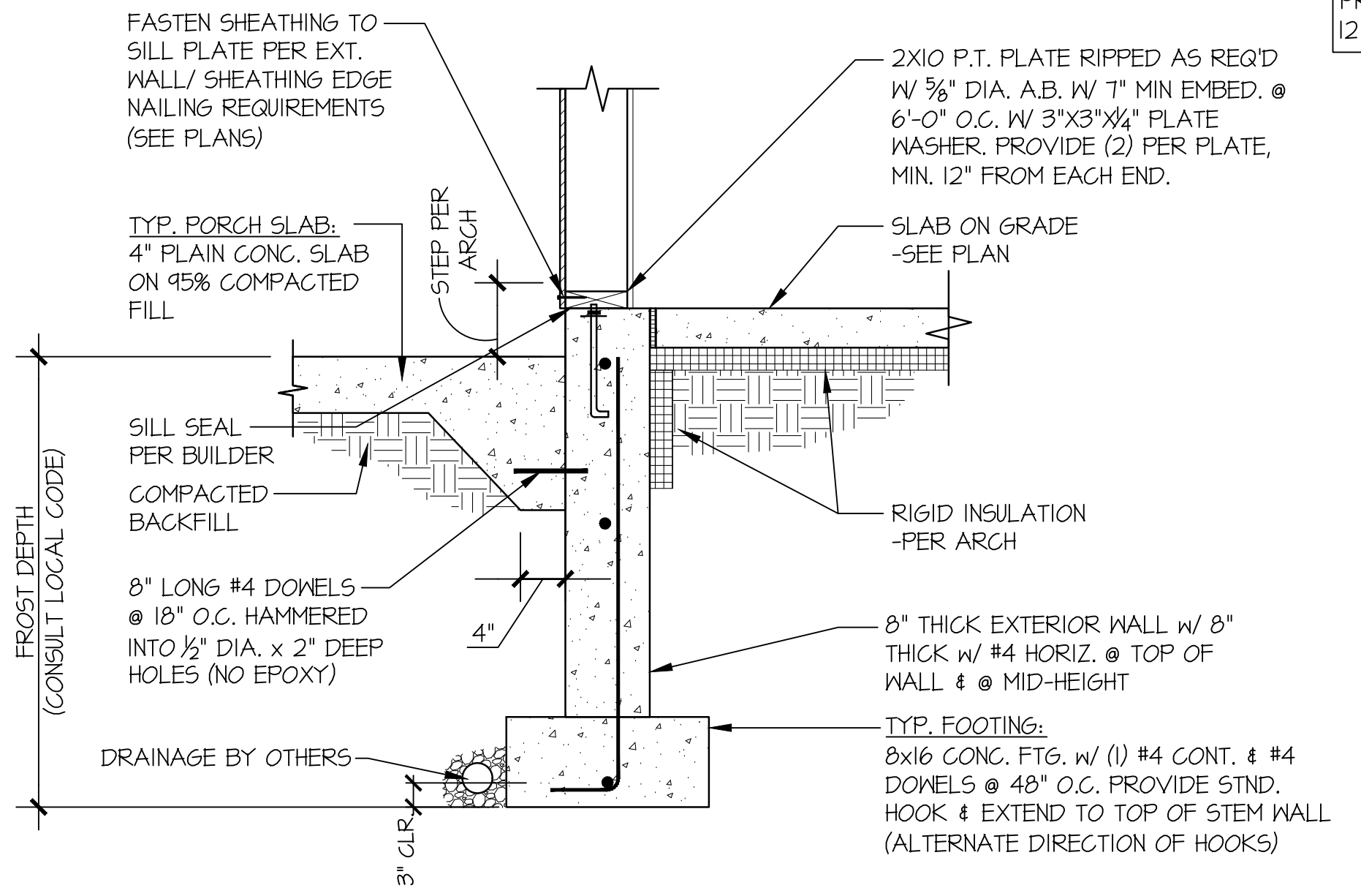
FASTEN SHEATHING TO SILL PLATE PER EXT. WALL/ SHEATHING EDGE NAILING REQUIREMENTS (SEE PLANS)
2X10 P.T. PLATE RIPPED AS REQ'D W/ 5/8" DIA. A.B. W/ 7" MIN EMBED. @ 6'-0" O.C. W/ 3"X3"X1/4" PLATE WASHER. PROVIDE (2) PER PLATE, MIN. 12" FROM EACH END.
TYP. PORCH SLAB: 4" PLAIN CONC. SLAB ON 95% COMPACTED FILL
STEP PER ARCH
SLAB ON GRADE -SEE PLAN
SILL SEAL PER BUILDER
COMPACTED BACKFILL
RIGID INSULATION -PER ARCH
FROST DEPTH (CONSULT LOCAL CODE)
8" LONG #4 DOWELS @ 18" O.C. HAMMERED INTO 1/2" DIA. x 2" DEEP HOLES (NO EPOXY)
4"
8" THICK EXTERIOR WALL w/ 8" THICK w/ #4 HORIZ. @ TOP OF WALL & @ MID-HEIGHT
TYP. FOOTING: 8x16 CONC. FTG. w/ (1) #4 CONT. & #4 DOWELS @ 48" O.C. PROVIDE STND. HOOK & EXTEND TO TOP OF STEM WALL (ALTERNATE DIRECTION OF HOOKS)
DRAINAGE BY OTHERS
3" CLR.

① **TYPICAL CRAWLSPACE FOUNDATION**
SCALE: 3/4"=1'-0" @ PORCH SLAB

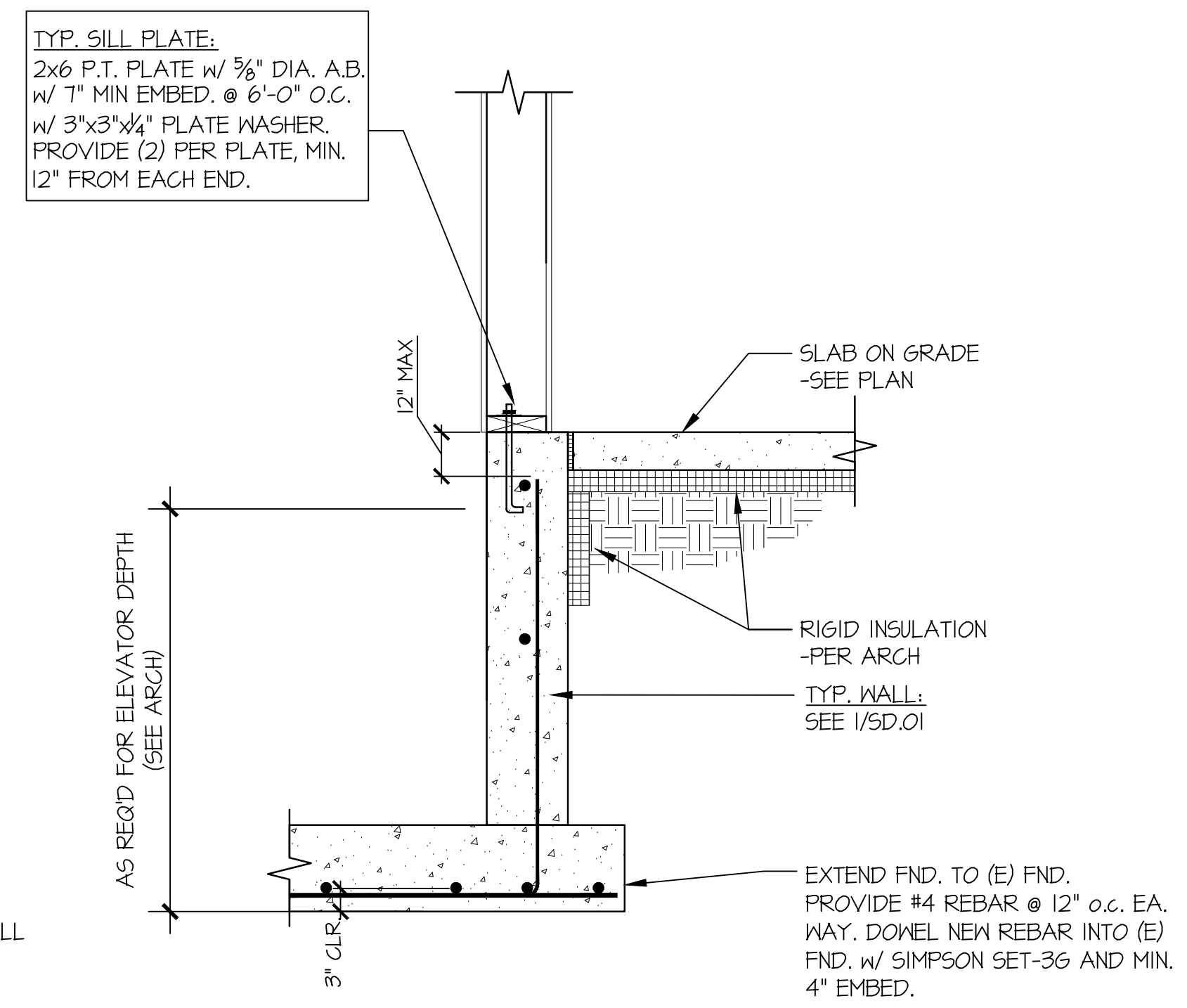
TYP. SILL PLATE: 2x6 P.T. PLATE w/ 5/8" DIA. A.B. w/ 7" MIN EMBED. @ 6'-0" O.C. w/ 3"x3"x1/4" PLATE WASHER. PROVIDE (2) PER PLATE, MIN. 12" FROM EACH END.
12" MAX
SLAB ON GRADE -SEE PLAN
AS REQ'D FOR ELEVATOR DEPTH (SEE ARCH)
RIGID INSULATION -PER ARCH
TYP. WALL: SEE 1/SD.01
EXTEND FND. TO (E) FND. PROVIDE #4 REBAR @ 12" o.c. EA. WAY. DOWEL NEW REBAR INTO (E) FND. w/ SIMPSON SET-3G AND MIN. 4" EMBED.
3" CLR.

② **TYPICAL CRAWLSPACE FOUNDATION**
SCALE: 3/4"=1'-0"

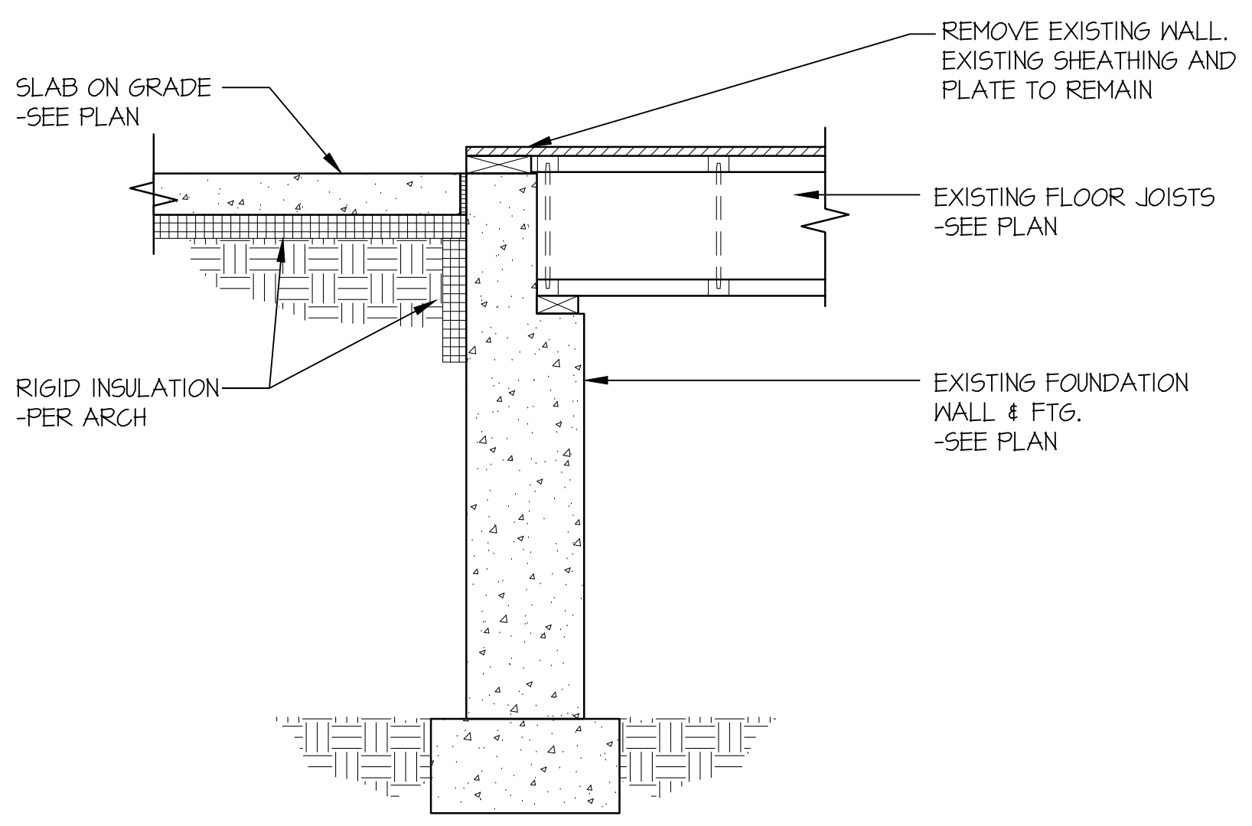
SLAB ON GRADE -SEE PLAN
REMOVE EXISTING WALL. EXISTING SHEATHING AND PLATE TO REMAIN
EXISTING FLOOR JOISTS -SEE PLAN
RIGID INSULATION -PER ARCH
EXISTING FOUNDATION WALL & FTG. -SEE PLAN

③ **TYPICAL CRAWLSPACE FOUNDATION**
SCALE: 3/4"=1'-0"

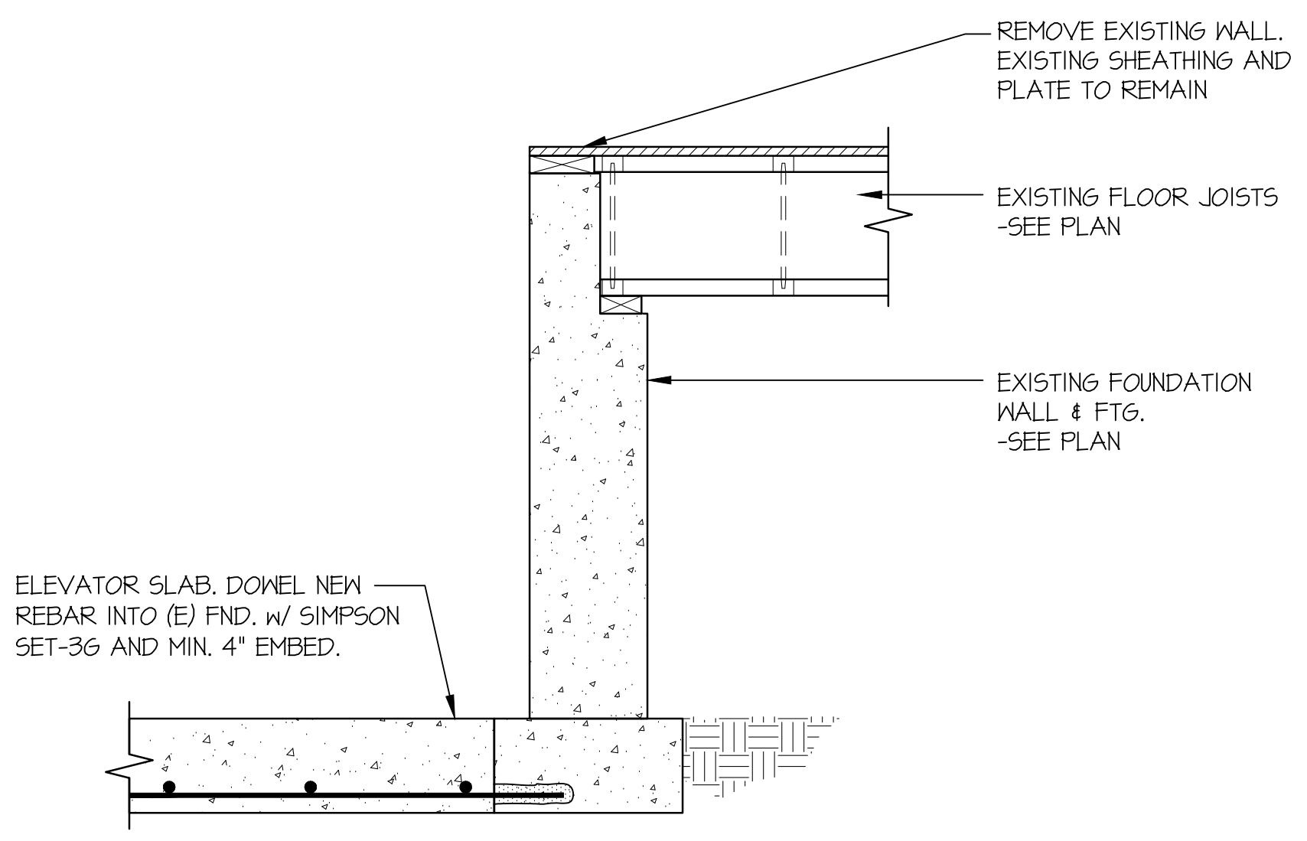
REMOVE EXISTING WALL. EXISTING SHEATHING AND PLATE TO REMAIN
EXISTING FLOOR JOISTS -SEE PLAN
EXISTING FOUNDATION WALL & FTG. -SEE PLAN
ELEVATOR SLAB. DOWEL NEW REBAR INTO (E) FND. w/ SIMPSON SET-3G AND MIN. 4" EMBED.

④ **TYPICAL CRAWLSPACE FOUNDATION**
SCALE: 3/4"=1'-0"

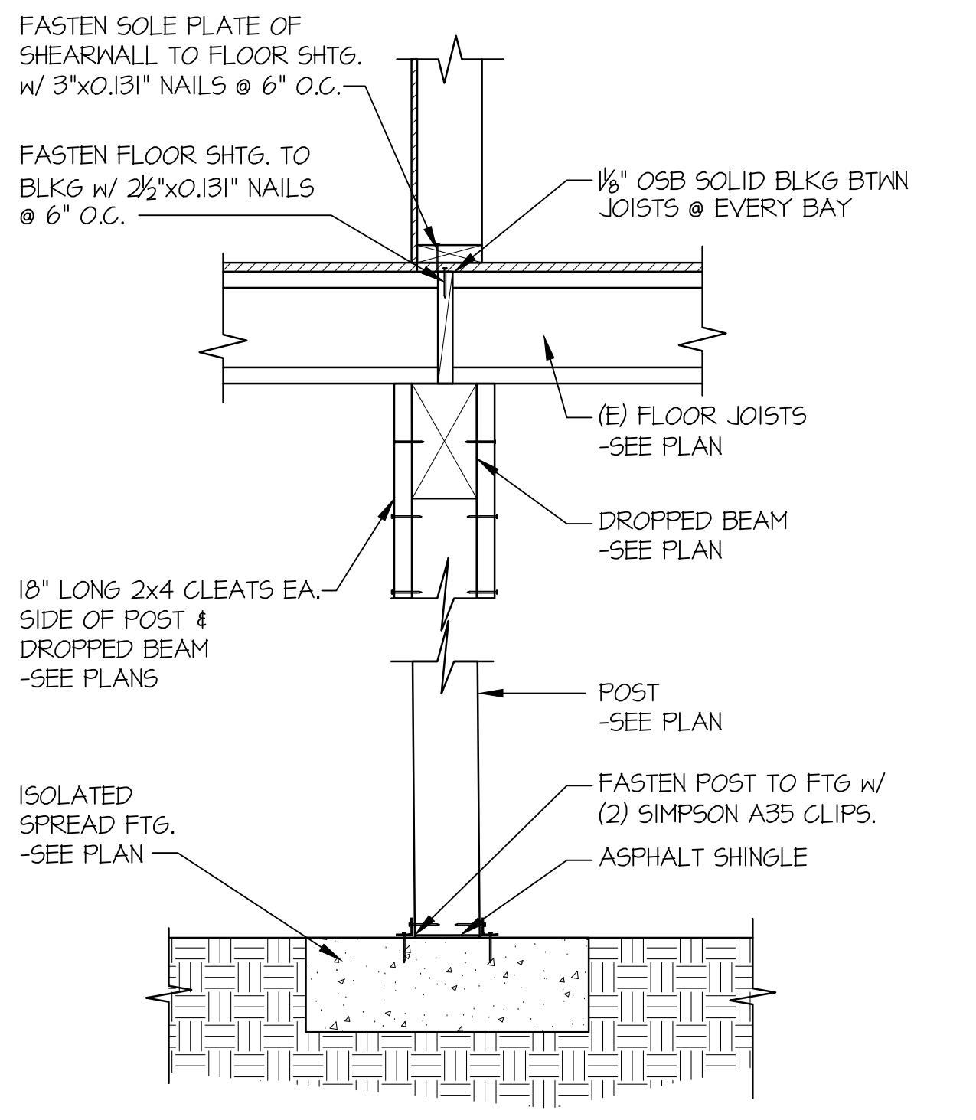
FASTEN SOLE PLATE OF SHEARWALL TO FLOOR SHTG. w/ 3"x0.131" NAILS @ 6" O.C.
FASTEN FLOOR SHTG. TO BLKG w/ 2½"x0.131" NAILS @ 6" O.C.
1⅛" OSB SOLID BLKG BTWN JOISTS @ EVERY BAY
(E) FLOOR JOISTS -SEE PLAN
DROPPED BEAM -SEE PLAN
18" LONG 2x4 CLEATS EA. SIDE OF POST & DROPPED BEAM -SEE PLANS
POST -SEE PLAN
ISOLATED SPREAD FTG. -SEE PLAN
FASTEN POST TO FTG w/ (2) SIMPSON A35 CLIPS.
ASPHALT SHINGLE

⑤ **TYPICAL CRAWL SPACE FOOTING DETAIL**
SCALE: 3/4"=1'-0"

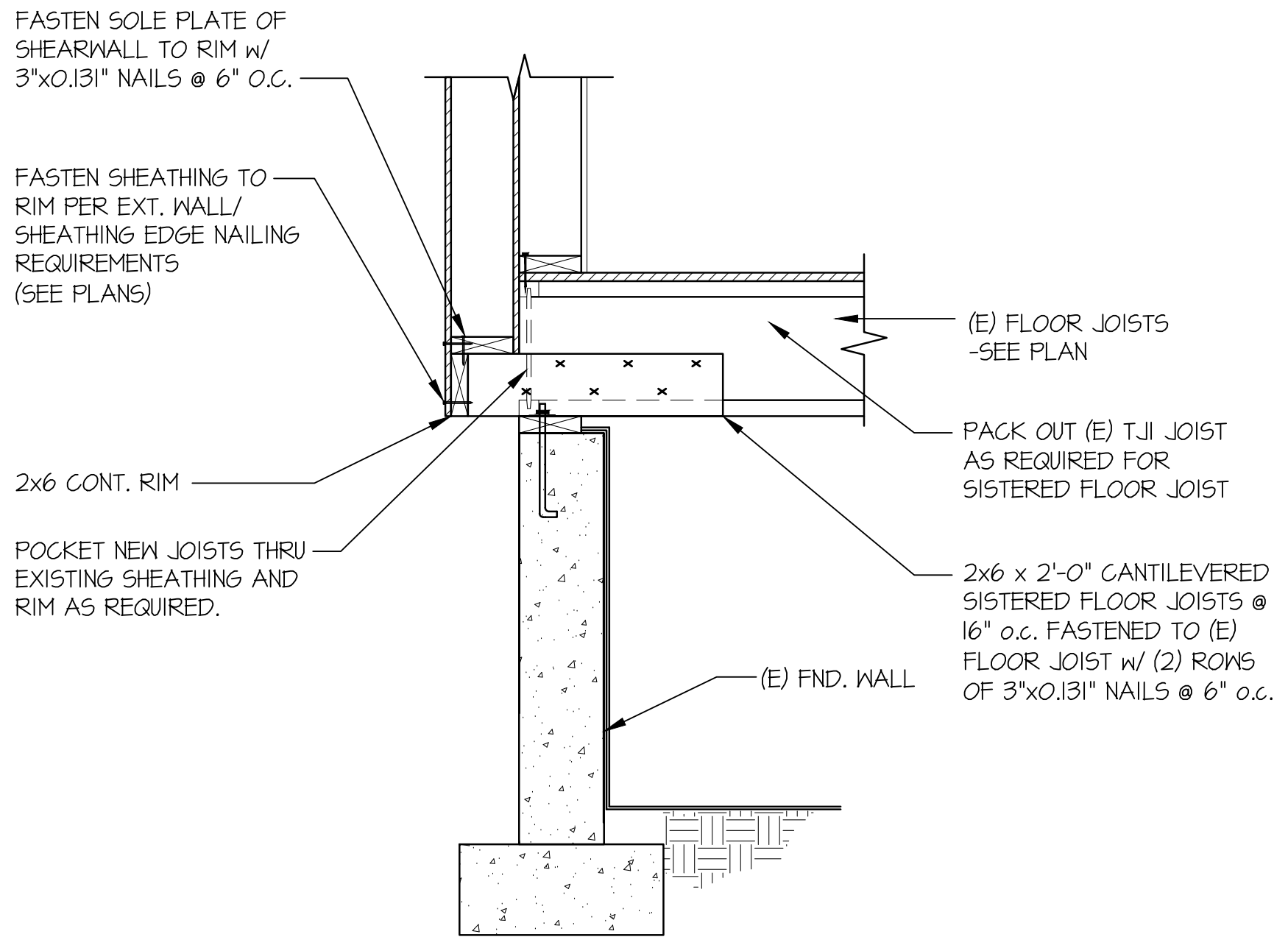
FASTEN SOLE PLATE OF SHEARWALL TO RIM w/ 3"x0.131" NAILS @ 6" O.C.
FASTEN SHEATHING TO RIM PER EXT. WALL/ SHEATHING EDGE NAILING REQUIREMENTS (SEE PLANS)
(E) FLOOR JOISTS -SEE PLAN
PACK OUT (E) TJI JOIST AS REQUIRED FOR SISTERED FLOOR JOIST
2x6 CONT. RIM
POCKET NEW JOISTS THRU EXISTING SHEATHING AND RIM AS REQUIRED.
2x6 x 2'-0" CANTILEVERED SISTERED FLOOR JOISTS @ 16" o.c. FASTENED TO (E) FLOOR JOIST w/ (2) ROWS OF 3"x0.131" NAILS @ 6" o.c.
(E) FND. WALL

⑥ **TYPICAL CRAWLSPACE FOUNDATION**
SCALE: 3/4"=1'-0"

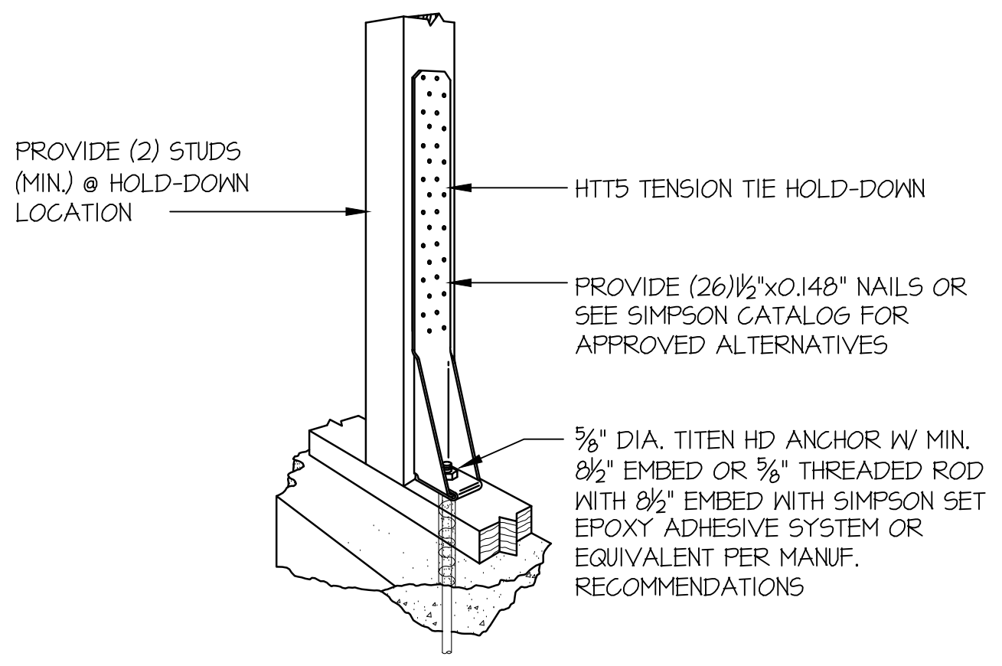
PROVIDE (2) STUDS (MIN.) @ HOLD-DOWN LOCATION
HTT5 TENSION TIE HOLD-DOWN
PROVIDE (26)1½"x0.148" NAILS OR SEE SIMPSON CATALOG FOR APPROVED ALTERNATIVES
⅝" DIA. TITEN HD ANCHOR W/ MIN. 8½" EMBED OR ⅝" THREADED ROD WITH 8½" EMBED WITH SIMPSON SET EPOXY ADHESIVE SYSTEM OR EQUIVALENT PER MANUF. RECOMMENDATIONS

Ⓐ **TYPICAL HOLD-DOWN**
NOT TO SCALE

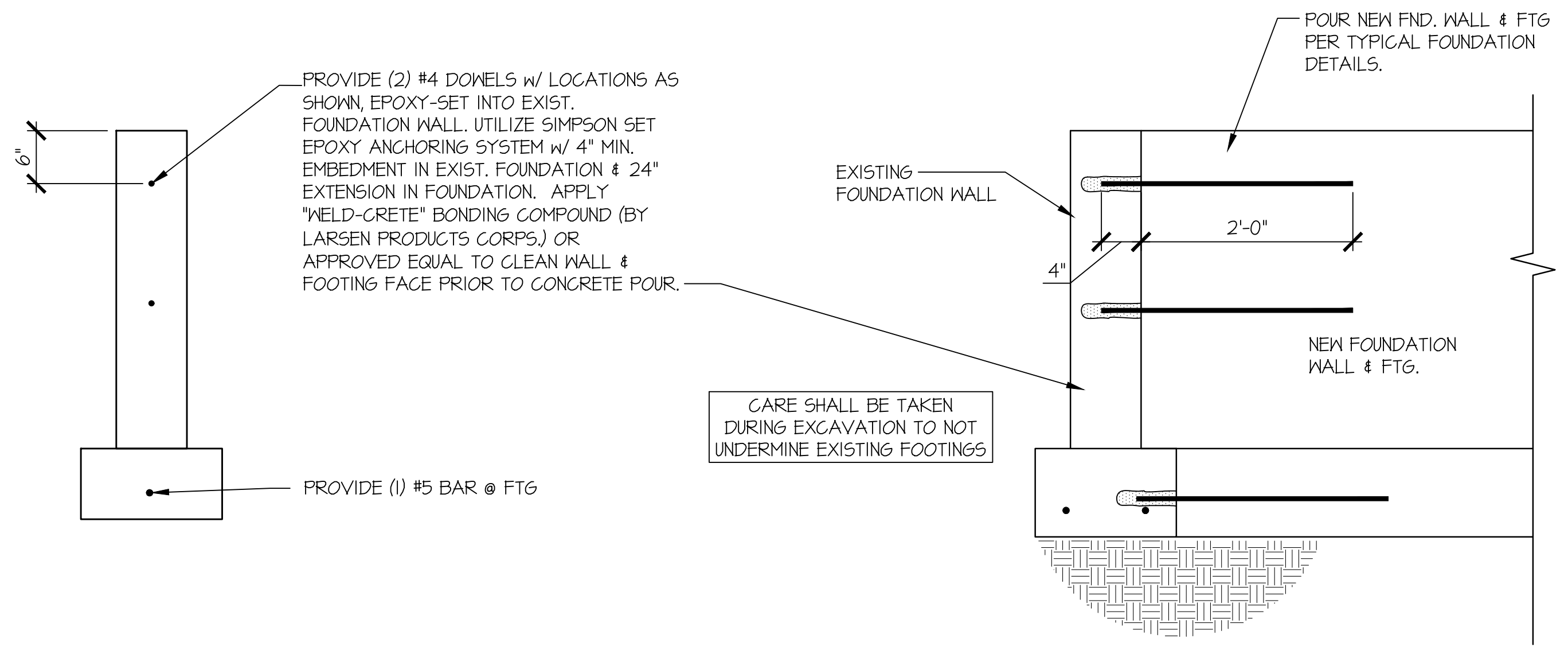
6"
PROVIDE (2) #4 DOWELS w/ LOCATIONS AS SHOWN, EPOXY-SET INTO EXIST. FOUNDATION WALL. UTILIZE SIMPSON SET EPOXY ANCHORING SYSTEM w/ 4" MIN. EMBEDMENT IN EXIST. FOUNDATION & 24" EXTENSION IN FOUNDATION. APPLY "WELD-CRETE" BONDING COMPOUND (BY LARSEN PRODUCTS CORPS.) OR APPROVED EQUAL TO CLEAN WALL & FOOTING FACE PRIOR TO CONCRETE POUR.
PROVIDE (1) #5 BAR @ FTG
POUR NEW FND. WALL & FTG PER TYPICAL FOUNDATION DETAILS.
EXISTING FOUNDATION WALL
2'-0"
4"
NEW FOUNDATION WALL & FTG.
CARE SHALL BE TAKEN DURING EXCAVATION TO NOT UNDERMINE EXISTING FOOTINGS

SECTION

ELEVATION

Ⓑ **TYPICAL FOUNDATION RETROFIT DETAIL**
SCALE: 3/4"=1'-0"

seal:

NICHOLAS J. MARTIGNETTI
56478

© copyright : MULHERN & KULP Structural Engineering, Inc.

MULHERN+KULP
RESIDENTIAL STRUCTURAL ENGINEERING
7220 Trade Street, Suite 295, San Diego, CA 92121
p 619-650-0010 ▸ mulhernkulp.com

M&K project number: 203-24016

project mgr: NJM
drawn by: MPM
issue date: 08-30-24

REVISIONS:

ARCHITECTURAL INNOVATIONS

FOUNDATION DETAILS

LEE REMODEL
8448 N. MERCER WAY,
MERCER ISLAND, WA

sheet:
SD.01

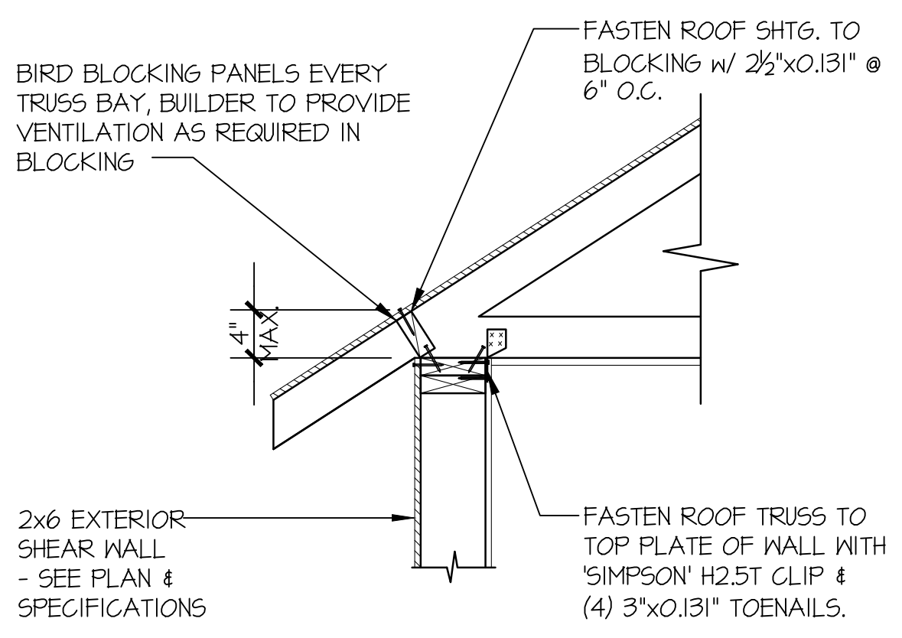
BIRD BLOCKING PANELS EVERY TRUSS BAY, BUILDER TO PROVIDE VENTILATION AS REQUIRED IN BLOCKING
FASTEN ROOF SHTG. TO BLOCKING w/ 2½"x0.131" @ 6" O.C.
4" MAX.
2x6 EXTERIOR SHEAR WALL - SEE PLAN & SPECIFICATIONS
FASTEN ROOF TRUSS TO TOP PLATE OF WALL WITH 'SIMPSON' H2.5T CLIP & (4) 3"x0.131" TOENAILS.

1 TYPICAL SHEAR TRANSFER DETAIL @ ROOF

SCALE: 3/4"=1'-0" HEEL HEIGHT LESS THAN 6 ½"

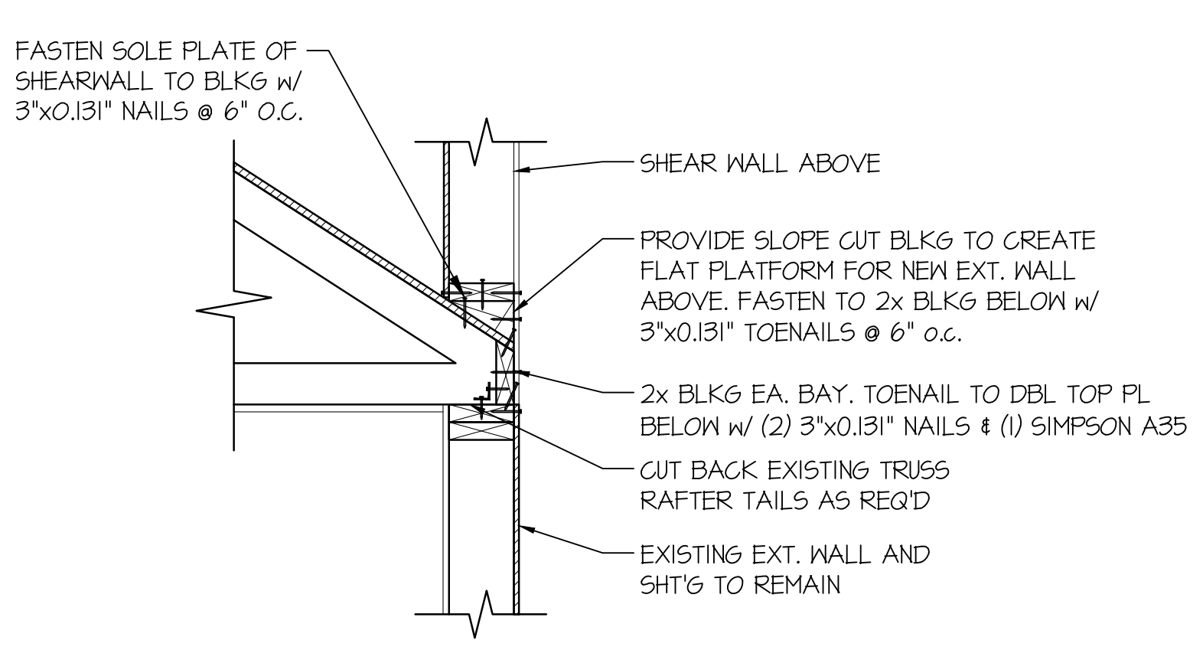
FASTEN SOLE PLATE OF SHEARWALL TO BLKG w/ 3"x0.131" NAILS @ 6" O.C.
SHEAR WALL ABOVE
PROVIDE SLOPE CUT BLKG TO CREATE FLAT PLATFORM FOR NEW EXT. WALL ABOVE. FASTEN TO 2x BLKG BELOW w/ 3"x0.131" TOENAILS @ 6" o.c.
2x BLKG EA. BAY. TOENAIL TO DBL TOP PL BELOW w/ (2) 3"x0.131" NAILS & (1) SIMPSON A35
CUT BACK EXISTING TRUSS RAFTER TAILS AS REQ'D
EXISTING EXT. WALL AND SHT'G TO REMAIN

2 SECTION

SCALE: 3/4"=1'-0" HEEL HEIGHT LESS THAN 4"

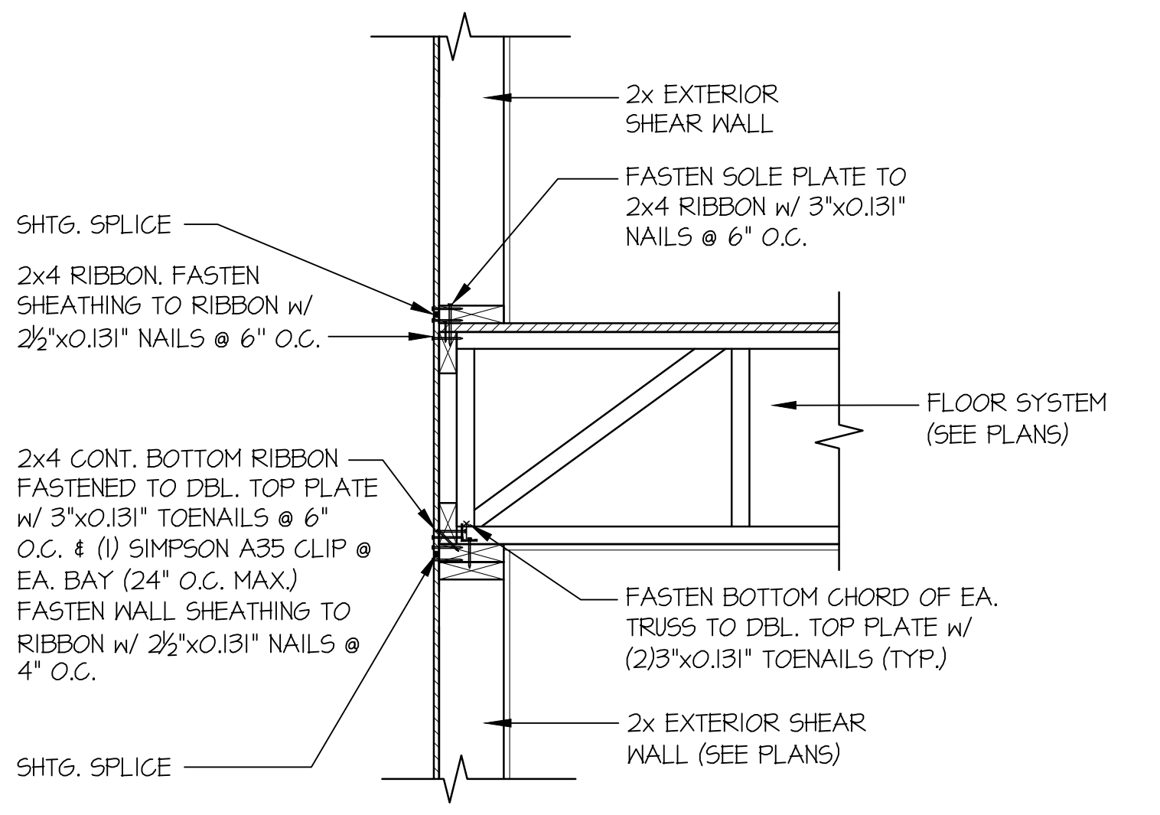
2x EXTERIOR SHEAR WALL
SHTG. SPLICE
FASTEN SOLE PLATE TO 2x4 RIBBON w/ 3"x0.131" NAILS @ 6" O.C.
2x4 RIBBON. FASTEN SHEATHING TO RIBBON w/ 2½"x0.131" NAILS @ 6" O.C.
FLOOR SYSTEM (SEE PLANS)
2x4 CONT. BOTTOM RIBBON FASTENED TO DBL. TOP PLATE w/ 3"x0.131" TOENAILS @ 6" O.C. & (1) SIMPSON A35 CLIP @ EA. BAY (24" O.C. MAX.) FASTEN WALL SHEATHING TO RIBBON w/ 2½"x0.131" NAILS @ 4" O.C.
FASTEN BOTTOM CHORD OF EA. TRUSS TO DBL. TOP PLATE w/ (2)3"x0.131" TOENAILS (TYP.)
2x EXTERIOR SHEAR WALL (SEE PLANS)
SHTG. SPLICE

3 TYPICAL SHEAR TRANSFER DETAIL BETWEEN FLOORS @ EXTERIOR WALL

SCALE: 3/4"=1'-0" PERPENDICULAR FRAMING

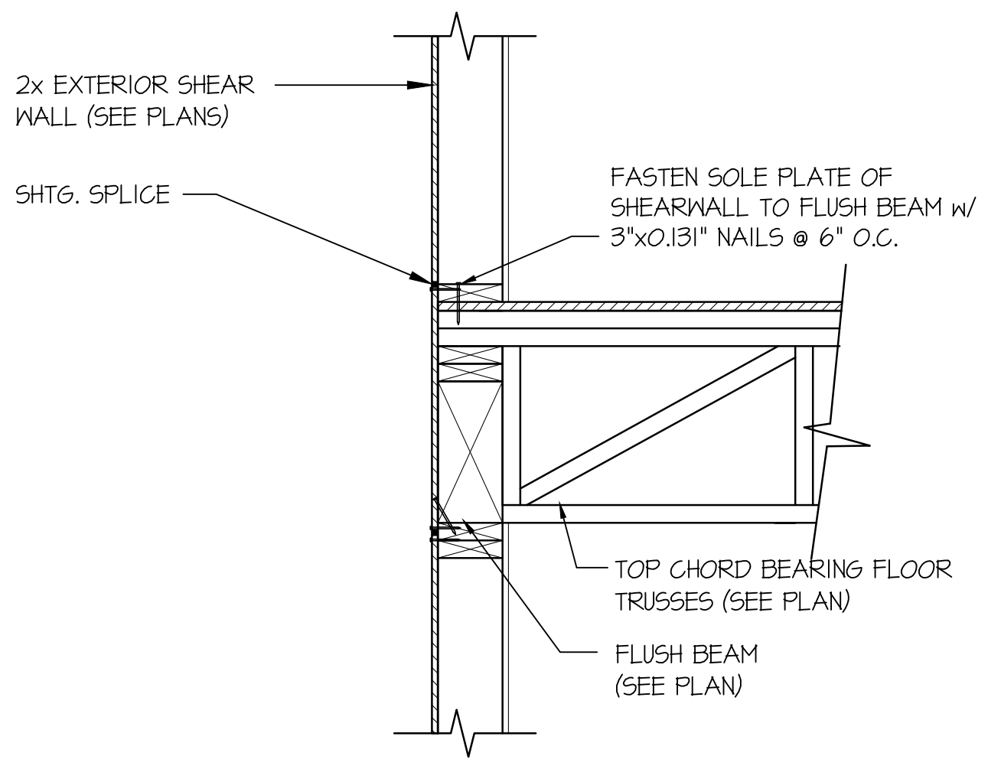
2x EXTERIOR SHEAR WALL (SEE PLANS)
SHTG. SPLICE
FASTEN SOLE PLATE OF SHEARWALL TO FLUSH BEAM w/ 3"x0.131" NAILS @ 6" O.C.
TOP CHORD BEARING FLOOR TRUSSES (SEE PLAN)
FLUSH BEAM (SEE PLAN)

3A SECTION

SCALE: 3/4"=1'-0"

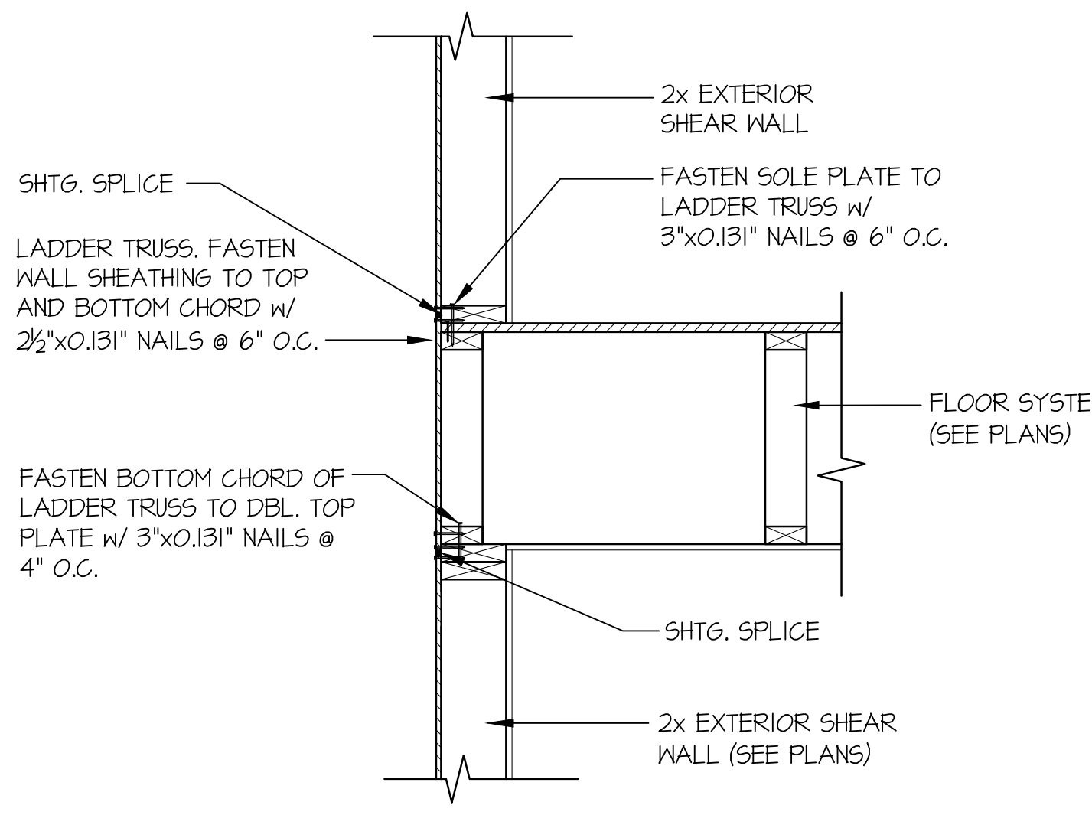
2x EXTERIOR SHEAR WALL
SHTG. SPLICE
FASTEN SOLE PLATE TO LADDER TRUSS w/ 3"x0.131" NAILS @ 6" O.C.
LADDER TRUSS. FASTEN WALL SHEATHING TO TOP AND BOTTOM CHORD w/ 2½"x0.131" NAILS @ 6" O.C.
FLOOR SYSTEM (SEE PLANS)
FASTEN BOTTOM CHORD OF LADDER TRUSS TO DBL. TOP PLATE w/ 3"x0.131" NAILS @ 4" O.C.
SHTG. SPLICE
2x EXTERIOR SHEAR WALL (SEE PLANS)

4 TYPICAL SHEAR TRANSFER DETAIL BETWEEN FLOORS @ EXTERIOR WALL

SCALE: 3/4"=1'-0" PARALLEL FRAMING

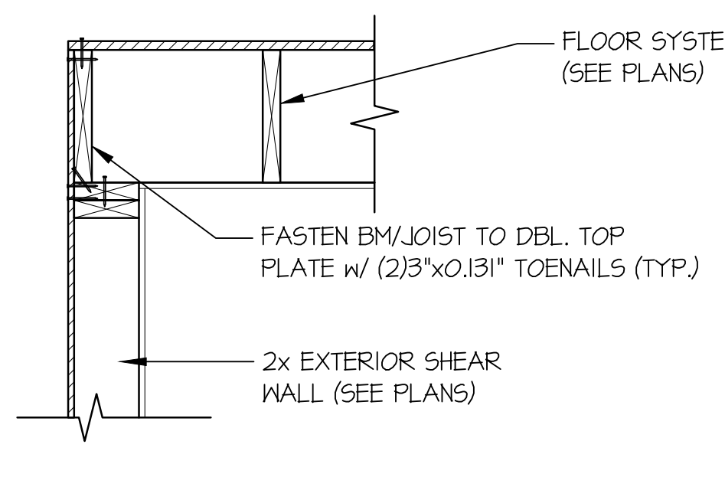
FLOOR SYSTEM (SEE PLANS)
FASTEN BM/JOIST TO DBL. TOP PLATE w/ (2)3"x0.131" TOENAILS (TYP.)
2x EXTERIOR SHEAR WALL (SEE PLANS)

4A SECTION

SCALE: 3/4"=1'-0"

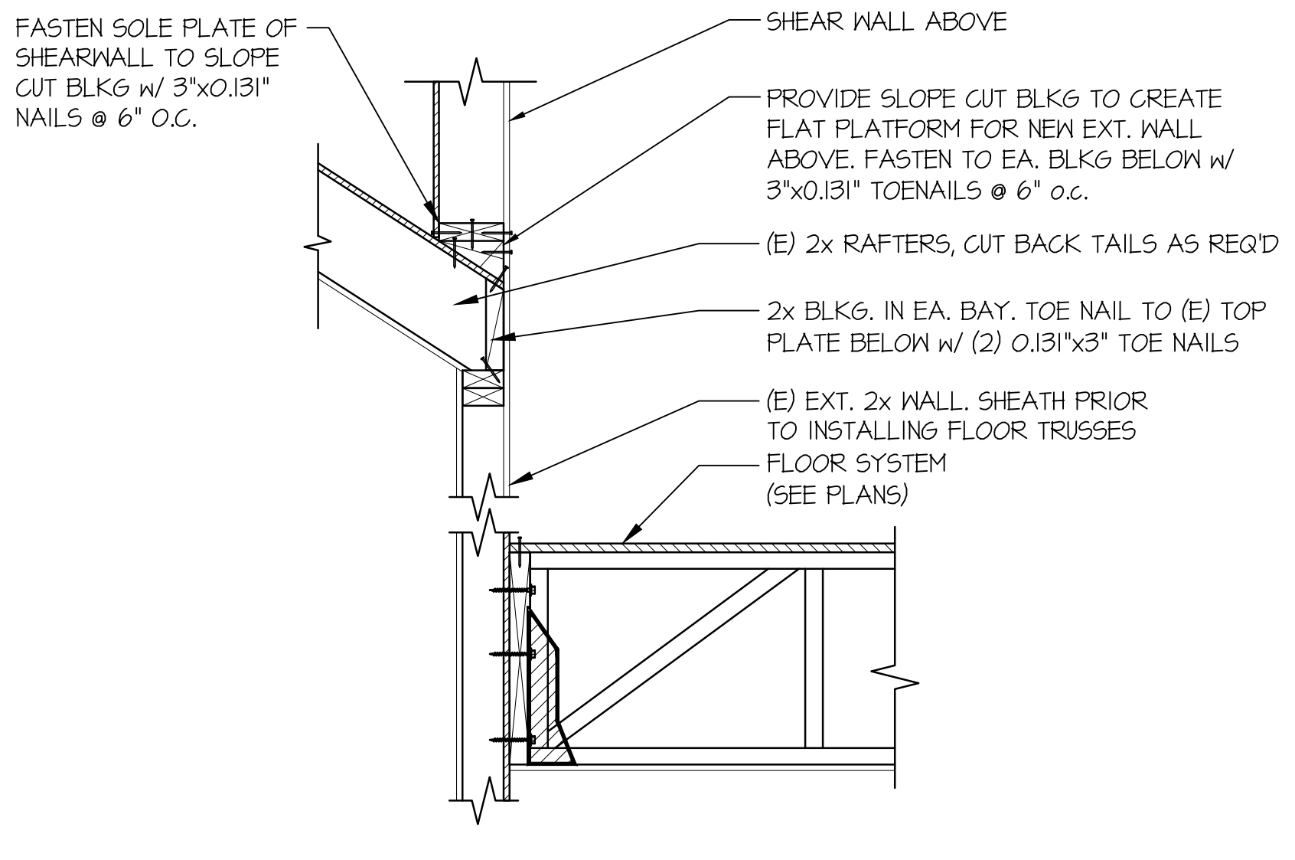
FASTEN SOLE PLATE OF SHEARWALL TO SLOPE CUT BLKG w/ 3"x0.131" NAILS @ 6" O.C.
SHEAR WALL ABOVE
PROVIDE SLOPE CUT BLKG TO CREATE FLAT PLATFORM FOR NEW EXT. WALL ABOVE. FASTEN TO EA. BLKG BELOW w/ 3"x0.131" TOENAILS @ 6" o.c.
(E) 2x RAFTERS, CUT BACK TAILS AS REQ'D
2x BLKG. IN EA. BAY. TOE NAIL TO (E) TOP PLATE BELOW w/ (2) 0.131"x3" TOE NAILS
(E) EXT. 2x WALL. SHEATH PRIOR TO INSTALLING FLOOR TRUSSES
FLOOR SYSTEM (SEE PLANS)

5 SECTION

SCALE: 3/4"=1'-0"

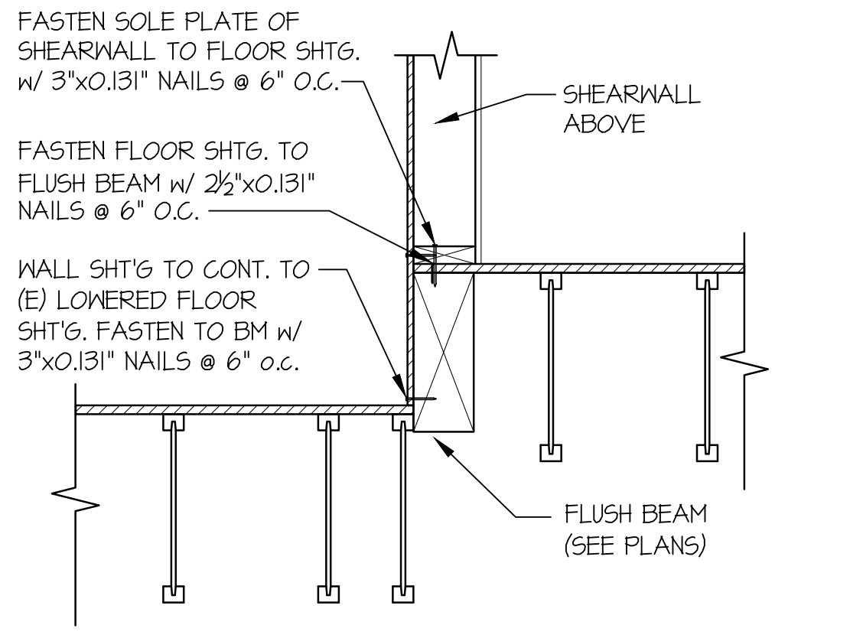
FASTEN SOLE PLATE OF SHEARWALL TO FLOOR SHTG. w/ 3"x0.131" NAILS @ 6" O.C.
SHEARWALL ABOVE
FASTEN FLOOR SHTG. TO FLUSH BEAM w/ 2½"x0.131" NAILS @ 6" O.C.
WALL SHT'G TO CONT. TO (E) LOWERED FLOOR SHT'G. FASTEN TO BM w/ 3"x0.131" NAILS @ 6" o.c.
FLUSH BEAM (SEE PLANS)

6 SECTION

SCALE: 3/4"=1'-0" PARALLEL FRAMING

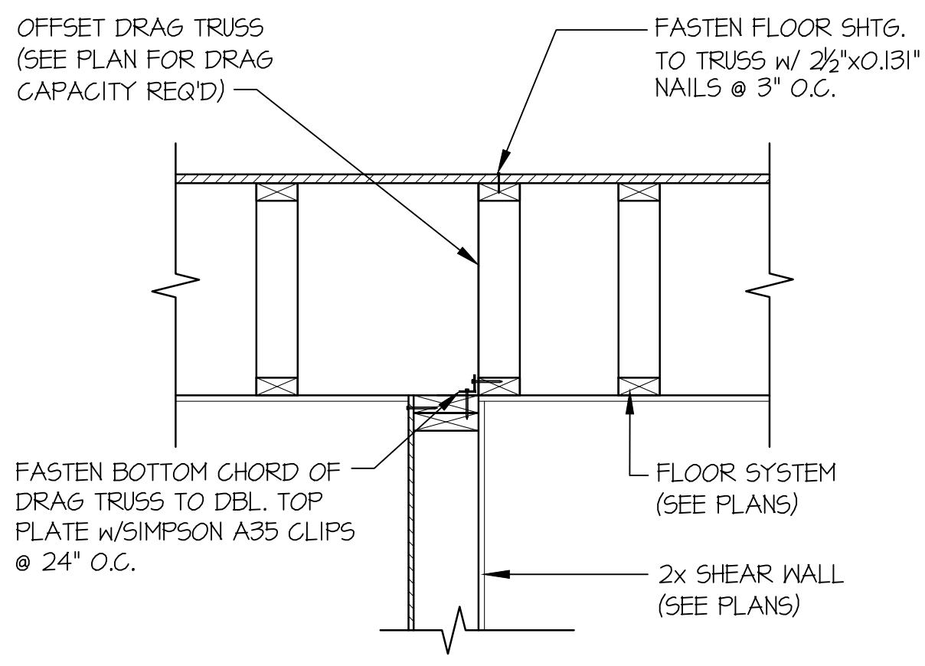
OFFSET DRAG TRUSS (SEE PLAN FOR DRAG CAPACITY REQ'D)
FASTEN FLOOR SHTG. TO TRUSS w/ 2½"x0.131" NAILS @ 3" O.C.
FASTEN BOTTOM CHORD OF DRAG TRUSS TO DBL. TOP PLATE w/SIMPSON A35 CLIPS @ 24" O.C.
FLOOR SYSTEM (SEE PLANS)
2x SHEAR WALL (SEE PLANS)

12 SHEAR TRANSFER DETAIL @ SHEAR WALL BELOW

SCALE: 3/4"=1'-0"

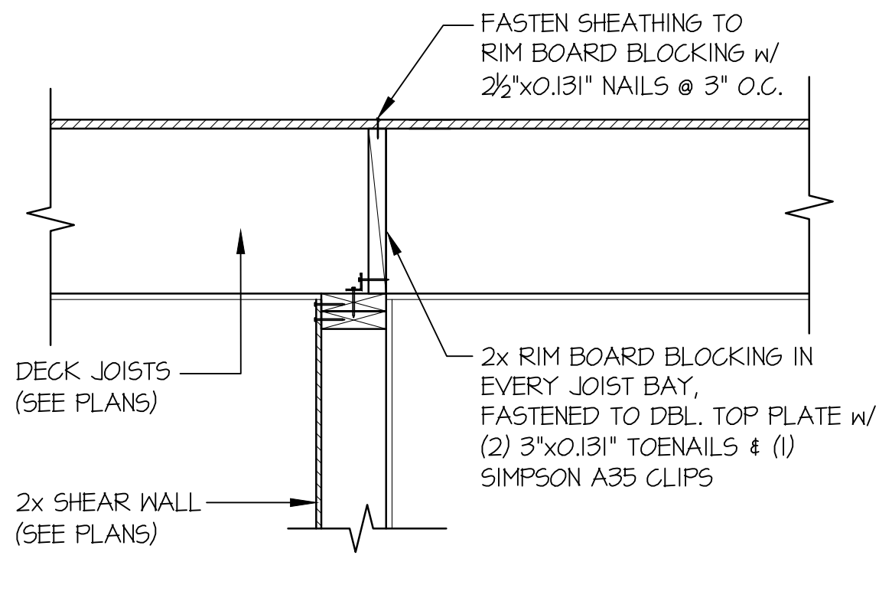
FASTEN SHEATHING TO RIM BOARD BLOCKING w/ 2½"x0.131" NAILS @ 3" O.C.
DECK JOISTS (SEE PLANS)
2x RIM BOARD BLOCKING IN EVERY JOIST BAY, FASTENED TO DBL. TOP PLATE w/ (2) 3"x0.131" TOENAILS & (1) SIMPSON A35 CLIPS
2x SHEAR WALL (SEE PLANS)

14 SHEAR TRANSFER DETAIL @ INTERIOR SHEAR WALL

SCALE: 3/4"=1'-0"

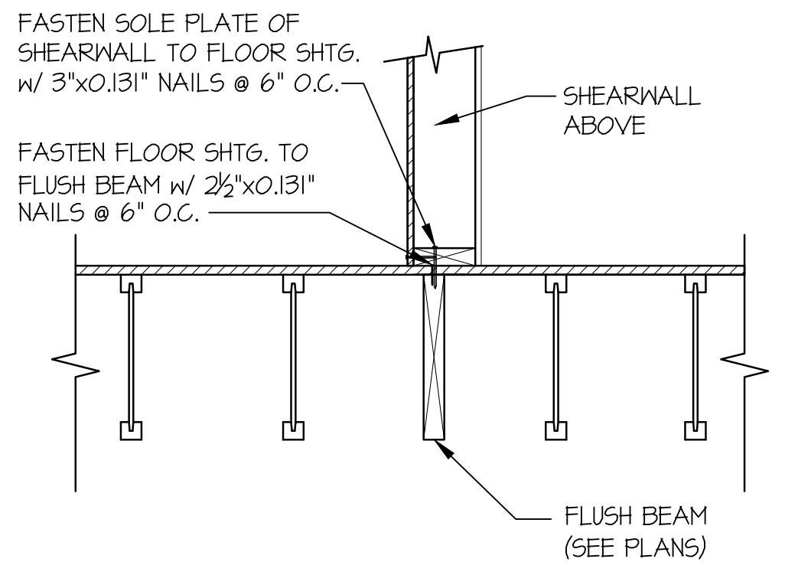
FASTEN SOLE PLATE OF SHEARWALL TO FLOOR SHTG. w/ 3"x0.131" NAILS @ 6" O.C.
SHEARWALL ABOVE
FASTEN FLOOR SHTG. TO FLUSH BEAM w/ 2½"x0.131" NAILS @ 6" O.C.
FLUSH BEAM (SEE PLANS)

19 SHEAR TRANSFER DETAIL @ INTERIOR SHEARWALL ABOVE

SCALE: 3/4"=1'-0" PARALLEL FRAMING

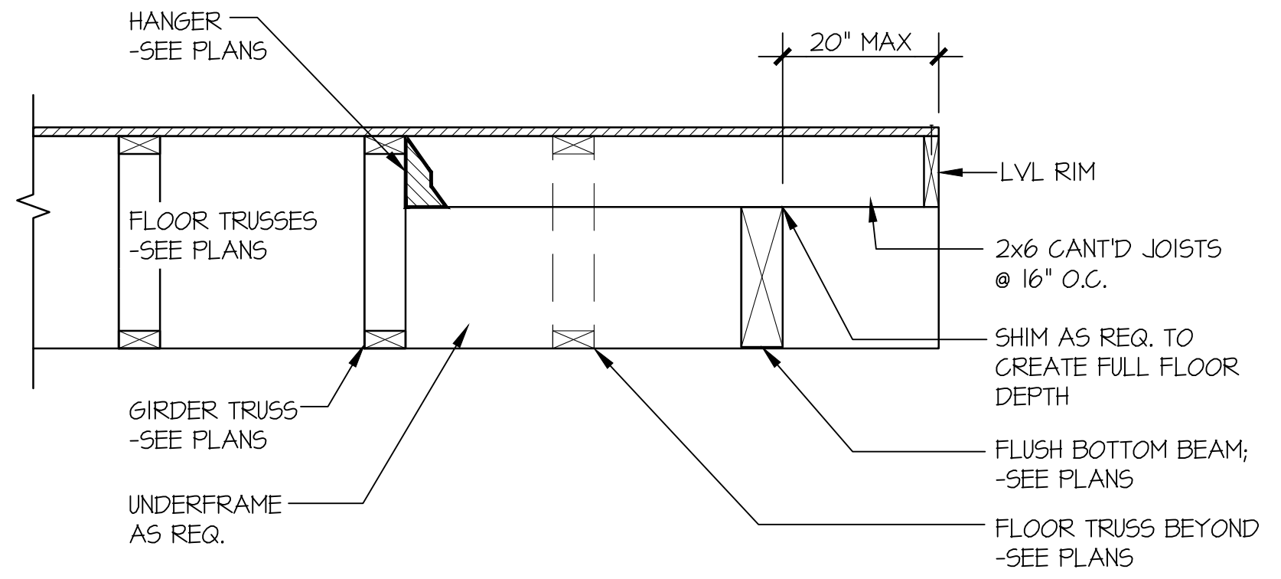
HANGER -SEE PLANS
20" MAX
LVL RIM
FLOOR TRUSSES -SEE PLANS
2x6 CANT'D JOISTS @ 16" O.C.
SHIM AS REQ. TO CREATE FULL FLOOR DEPTH
GIRDER TRUSS -SEE PLANS
FLUSH BOTTOM BEAM; -SEE PLANS
UNDERFRAME AS REQ.
FLOOR TRUSS BEYOND -SEE PLANS

37 SECTION

SCALE: 3/4"=1'-0" PERPENDICULAR FRAMING

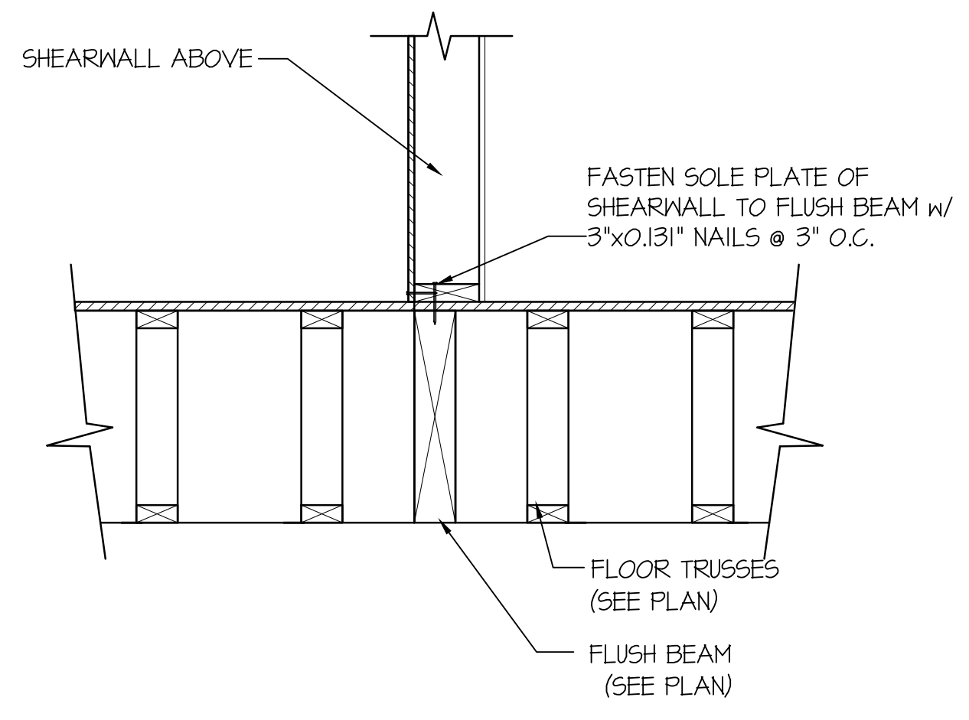
SHEARWALL ABOVE
FASTEN SOLE PLATE OF SHEARWALL TO FLUSH BEAM w/ 3"x0.131" NAILS @ 3" O.C.
FLOOR TRUSSES (SEE PLAN)
FLUSH BEAM (SEE PLAN)

38 SHEAR TRANSFER DETAIL @ INTERIOR SHEARWALL ABOVE

SCALE: 3/4"=1'-0"

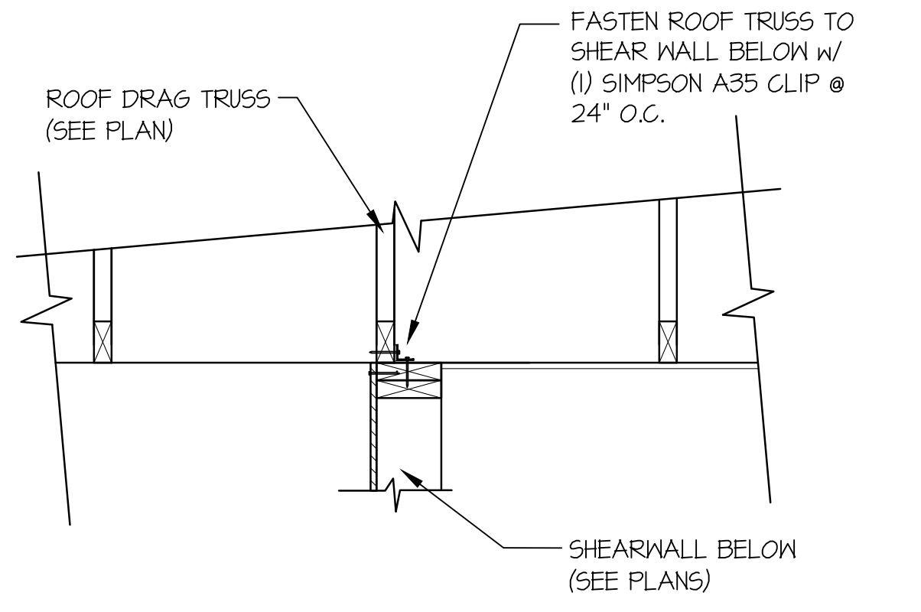
FASTEN ROOF TRUSS TO SHEAR WALL BELOW w/ (1) SIMPSON A35 CLIP @ 24" O.C.
ROOF DRAG TRUSS (SEE PLAN)
SHEARWALL BELOW (SEE PLANS)

47 SHEAR TRANSFER DETAIL @ INTERIOR SHEARWALL BELOW

SCALE: 3/4"=1'-0"

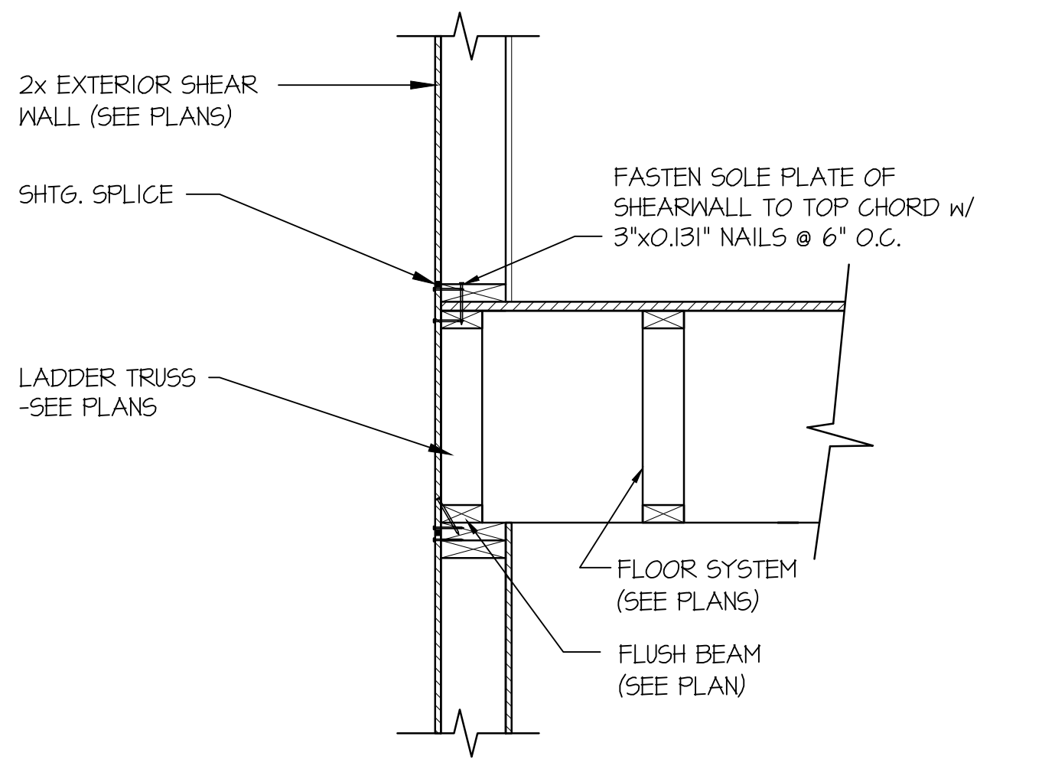
2x EXTERIOR SHEAR WALL (SEE PLANS)
SHTG. SPLICE
FASTEN SOLE PLATE OF SHEARWALL TO TOP CHORD w/ 3"x0.131" NAILS @ 6" O.C.
LADDER TRUSS -SEE PLANS
FLOOR SYSTEM (SEE PLANS)
FLUSH BEAM (SEE PLAN)

48 SECTION

SCALE: 3/4"=1'-0"

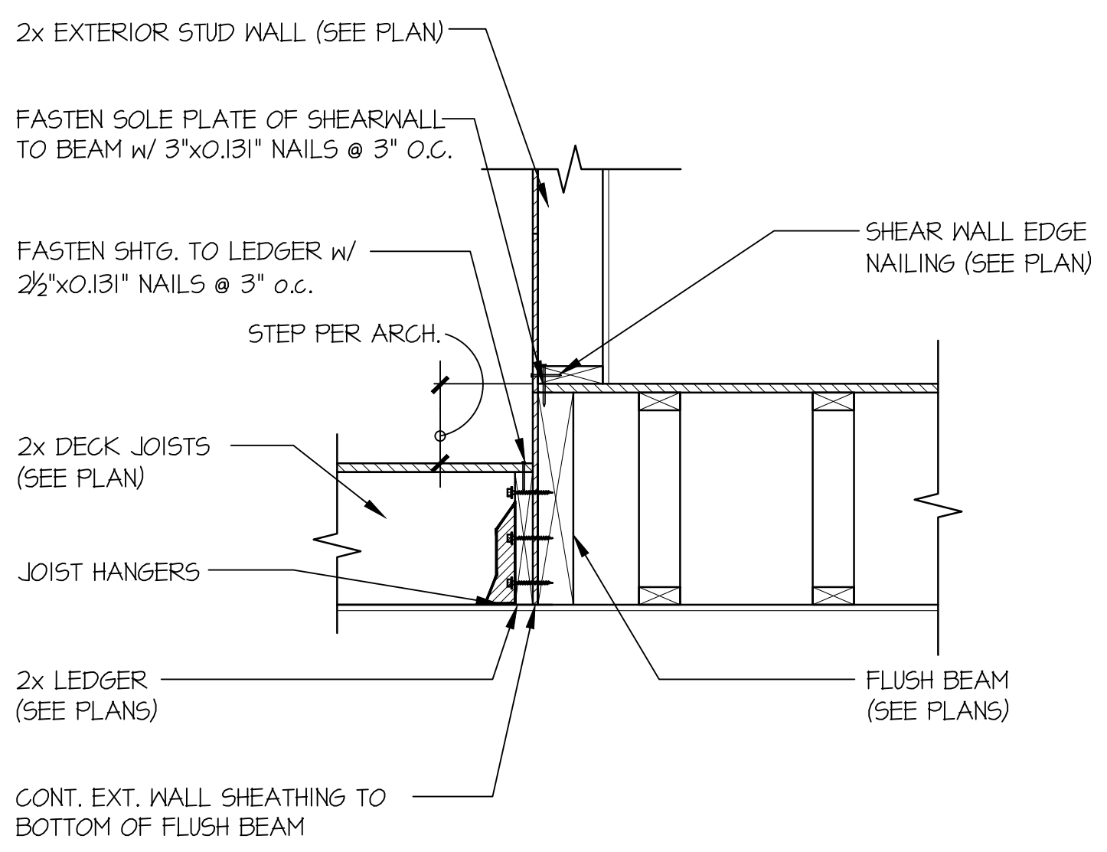
2x EXTERIOR STUD WALL (SEE PLAN)
FASTEN SOLE PLATE OF SHEARWALL TO BEAM w/ 3"x0.131" NAILS @ 3" O.C.
FASTEN SHTG. TO LEDGER w/ 2½"x0.131" NAILS @ 3" o.c.
SHEAR WALL EDGE NAILING (SEE PLAN)
STEP PER ARCH.
2x DECK JOISTS (SEE PLAN)
JOIST HANGERS
2x LEDGER (SEE PLANS)
FLUSH BEAM (SEE PLANS)
CONT. EXT. WALL SHEATHING TO BOTTOM OF FLUSH BEAM

72 TYPICAL SHEAR TRANSFER DETAIL @ EXT. DECK FRAMING

SCALE: 3/4"=1'-0"

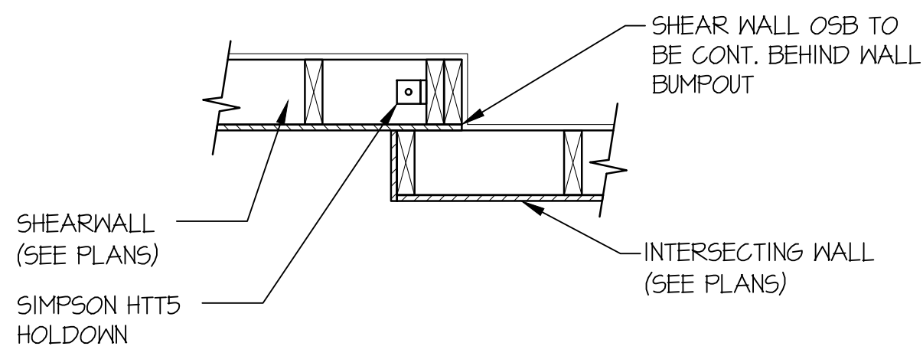
SHEAR WALL OSB TO BE CONT. BEHIND WALL BUMPOUT
SHEARWALL (SEE PLANS)
INTERSECTING WALL (SEE PLANS)
SIMPSON HTT5 HOLDOWN

96 SHEAR TRANSFER DETAIL @ INTERSECTION

SCALE: 3/4"=1'-0"

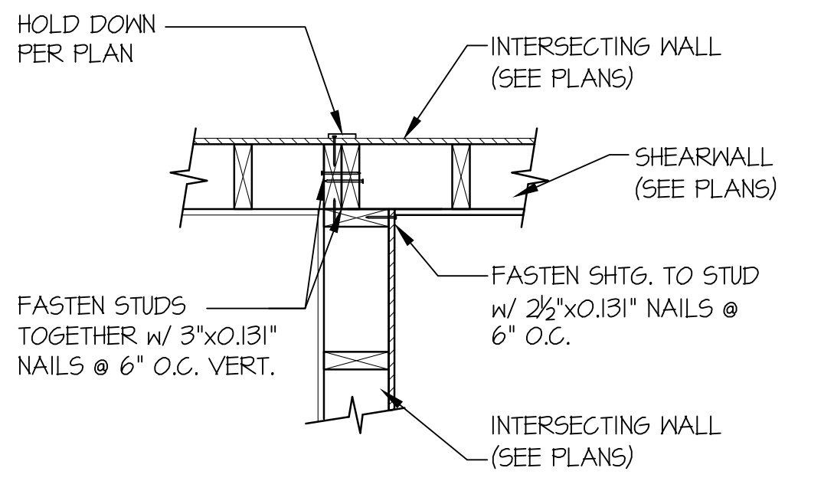
HOLD DOWN PER PLAN
INTERSECTING WALL (SEE PLANS)
SHEARWALL (SEE PLANS)
FASTEN STUDS TOGETHER w/ 3"x0.131" NAILS @ 6" O.C. VERT.
FASTEN SHTG. TO STUD w/ 2½"x0.131" NAILS @ 6" O.C.
INTERSECTING WALL (SEE PLANS)

97 SHEAR TRANSFER DETAIL @ INTERSECTION

SCALE: 3/4"=1'-0"

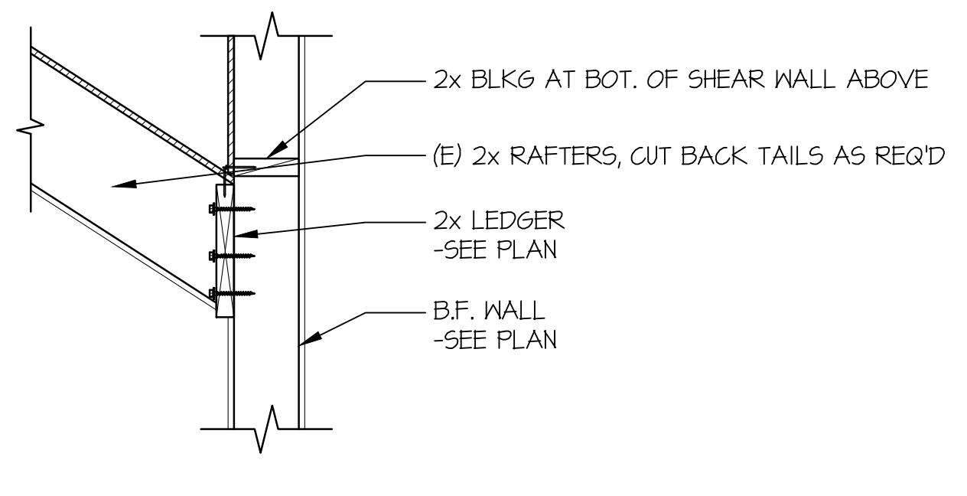
2x BLKG AT BOT. OF SHEAR WALL ABOVE
(E) 2x RAFTERS, CUT BACK TAILS AS REQ'D
2x LEDGER -SEE PLAN
B.F. WALL -SEE PLAN

100 SECTION

SCALE: 3/4"=1'-0" PERPENDICULAR FRAMING

seal:

NICHOLAS J. MARTIGNETTI
56478

© copyright : MULHERN & KULP Structural Engineering, Inc.

MULHERN+KULP
RESIDENTIAL STRUCTURAL ENGINEERING
7220 Trade Street, Suite 295, San Diego, CA 92121
p 619-650-0010 ▸ mulhernkulp.com

M&K project number: 203-24016
project mgr: NJM
drawn by: MPM
issue date: 08-30-24

REVISIONS:

ARCHITECTURAL INNOVATIONS

STRUCTURAL DETAILS

LEE REMODEL
8448 N. MERCER WAY,
MERCER ISLAND, WA

sheet:
SD-1

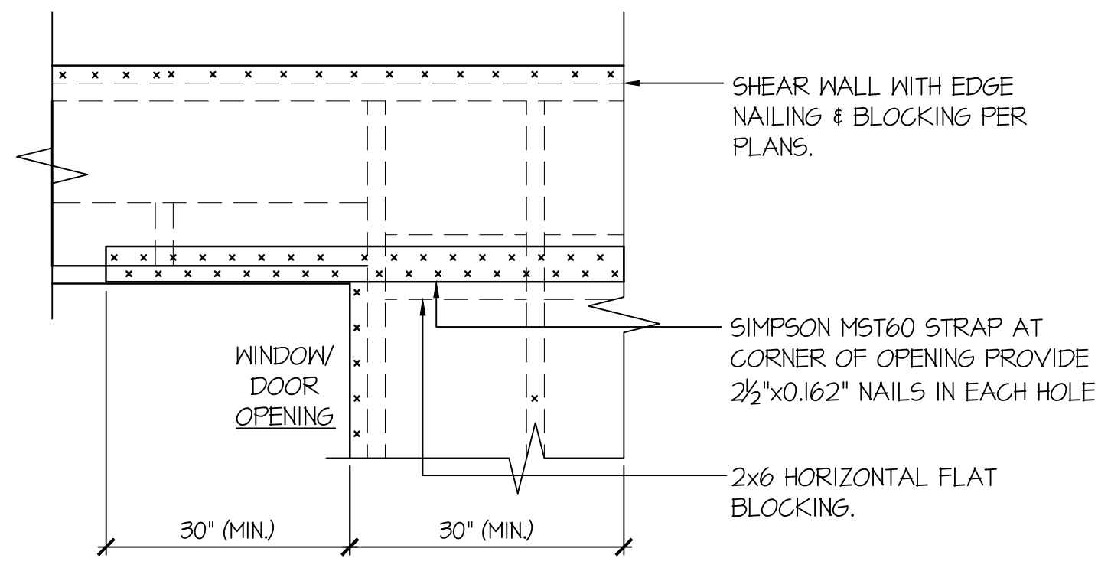
SHEAR WALL WITH EDGE NAILING & BLOCKING PER PLANS.
WINDOW/ DOOR OPENING
SIMPSON MST60 STRAP AT CORNER OF OPENING PROVIDE 2½"x0.162" NAILS IN EACH HOLE
2x6 HORIZONTAL FLAT BLOCKING.
30" (MIN.)
30" (MIN.)

- ONLY REQUIRED WHERE SPECIFIED ON STRUCTURAL PLANS

EXT. WALL & INT. SHEARWALL OPENING ELEVATION

92 SCALE: NTS

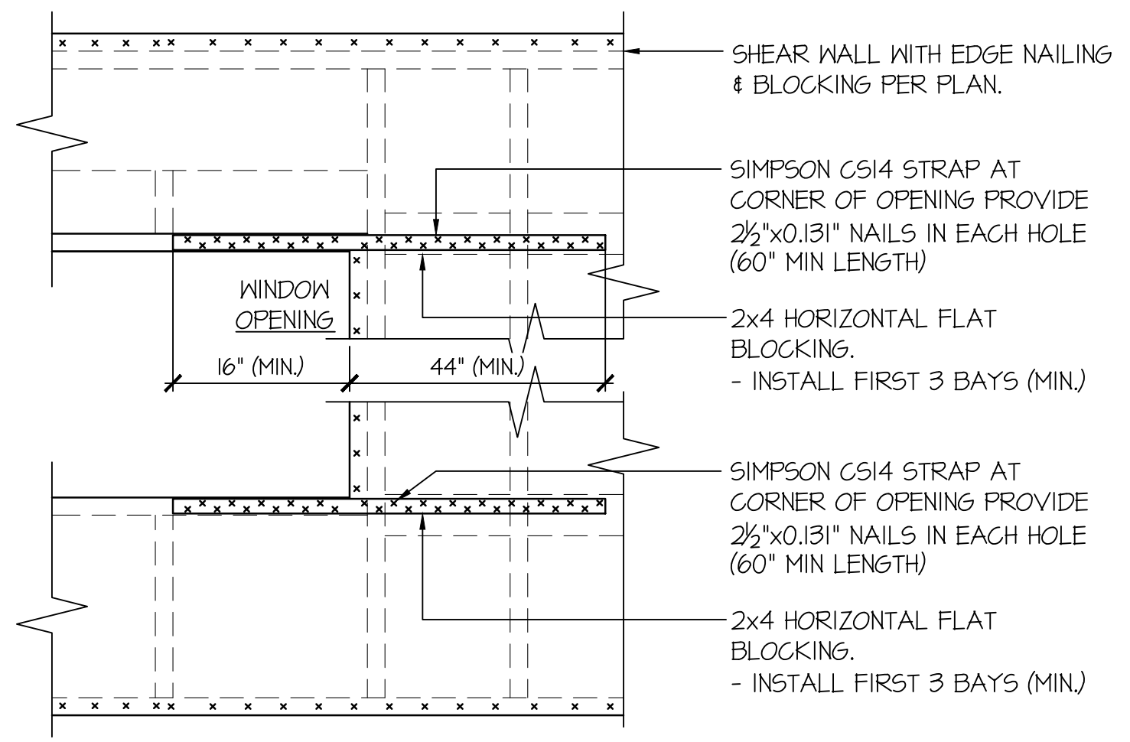
SHEAR WALL WITH EDGE NAILING & BLOCKING PER PLAN.
SIMPSON CS14 STRAP AT CORNER OF OPENING PROVIDE 2½"x0.131" NAILS IN EACH HOLE (60" MIN LENGTH)
WINDOW OPENING
2x4 HORIZONTAL FLAT BLOCKING. - INSTALL FIRST 3 BAYS (MIN.)
16" (MIN.)
44" (MIN.)
SIMPSON CS14 STRAP AT CORNER OF OPENING PROVIDE 2½"x0.131" NAILS IN EACH HOLE (60" MIN LENGTH)
2x4 HORIZONTAL FLAT BLOCKING. - INSTALL FIRST 3 BAYS (MIN.)

- ONLY REQUIRED WHERE SPECIFIED ON STRUCTURAL PLANS
- IF MIN LENGTH IS NOT PROVIDED RUN STRAP TO END OF WALL

EXT. WALL & INT. SHEARWALL OPENING ELEVATION

93 SCALE: NTS

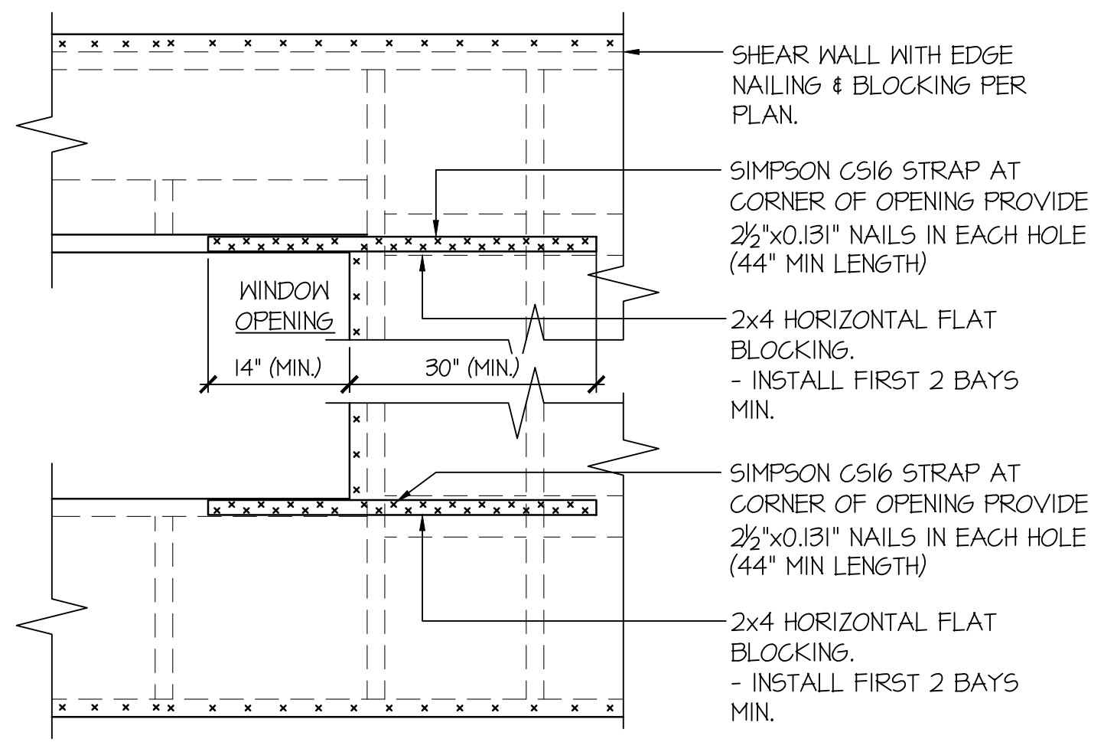
SHEAR WALL WITH EDGE NAILING & BLOCKING PER PLAN.
SIMPSON CS16 STRAP AT CORNER OF OPENING PROVIDE 2½"x0.131" NAILS IN EACH HOLE (44" MIN LENGTH)
WINDOW OPENING
2x4 HORIZONTAL FLAT BLOCKING. - INSTALL FIRST 2 BAYS MIN.
14" (MIN.)
30" (MIN.)
SIMPSON CS16 STRAP AT CORNER OF OPENING PROVIDE 2½"x0.131" NAILS IN EACH HOLE (44" MIN LENGTH)
2x4 HORIZONTAL FLAT BLOCKING. - INSTALL FIRST 2 BAYS MIN.

- ONLY REQUIRED WHERE SPECIFIED ON STRUCTURAL PLANS
- IF MIN LENGTH IS NOT PROVIDED RUN STRAP TO END OF WALL

EXT. WALL & INT. SHEARWALL OPENING ELEVATION

94 SCALE: NTS

BUILDER TO VERIFY EXISTING MASONRY IS IN SOUND STRUCTURAL CONDITION PRIOR TO ANY ADDITION. CONTACT M&K FOR FURTHER EVALUATION OF THE CHIMNEY IS DETERMINED TO NOT BE IN SOUND CONDITION

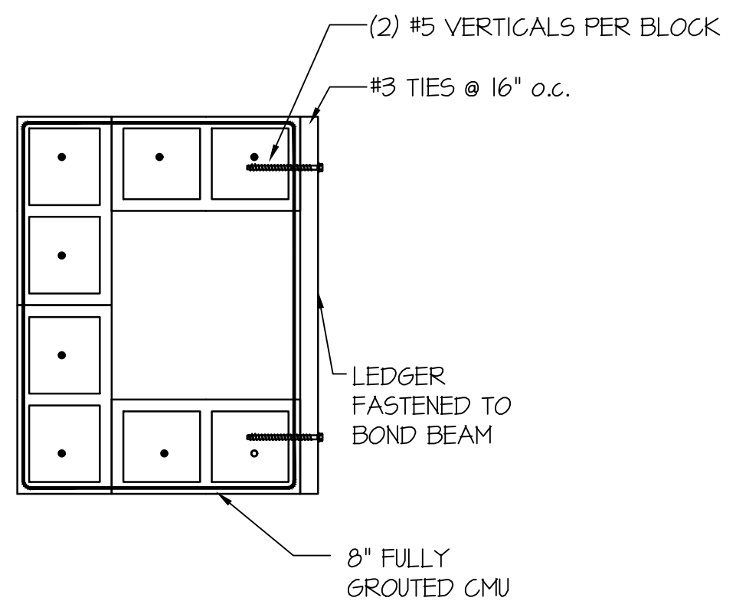
(2) #5 VERTICALS PER BLOCK
#3 TIES @ 16" o.c.
LEDGER FASTENED TO BOND BEAM
8" FULLY GROUTED CMU

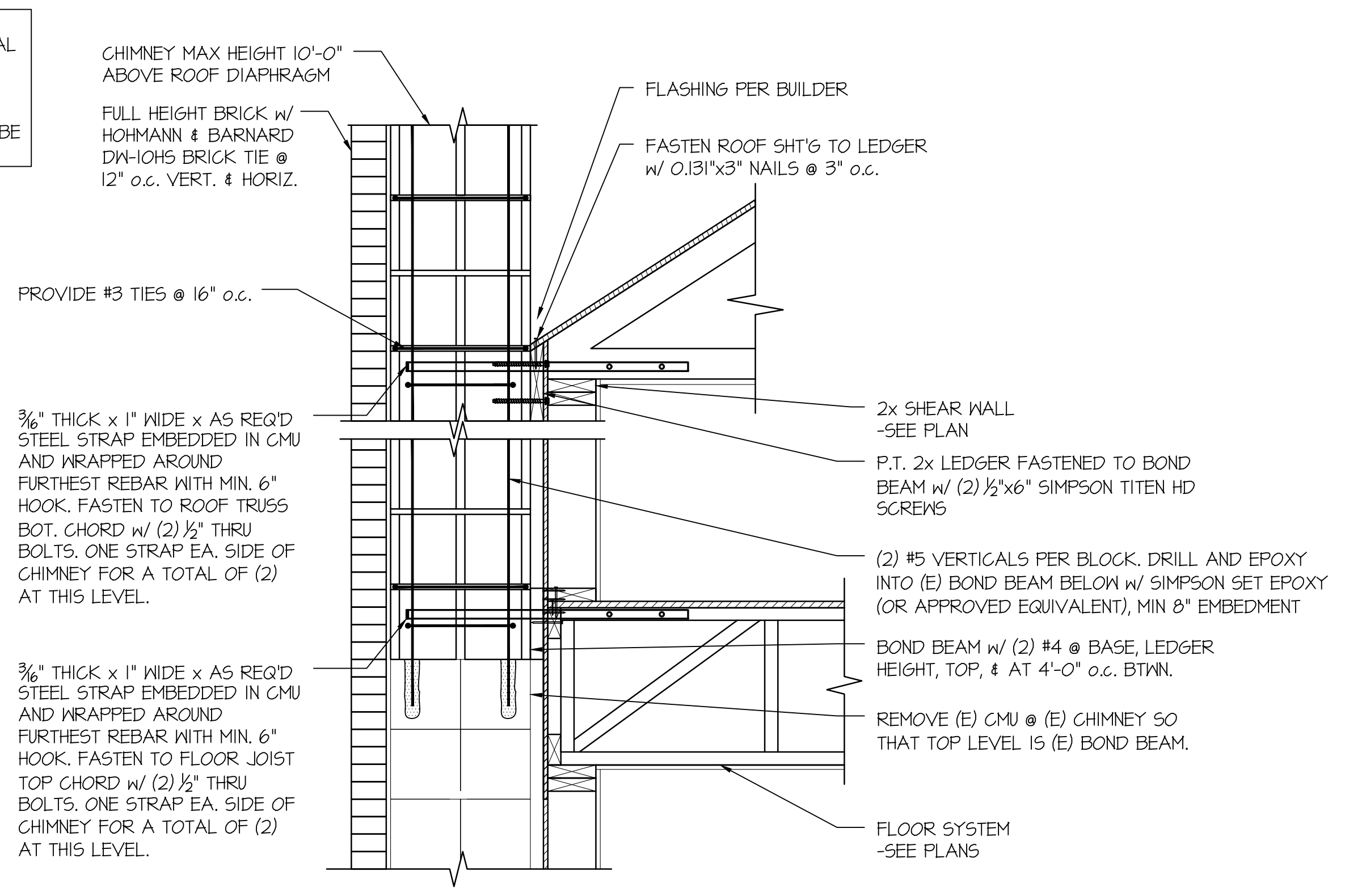
CHIMNEY MAX HEIGHT 10'-0" ABOVE ROOF DIAPHRAGM
FULL HEIGHT BRICK w/ HOHMANN & BARNARD DW-10HS BRICK TIE @ 12" o.c. VERT. & HORIZ.
PROVIDE #3 TIES @ 16" o.c.
3/16" THICK x 1" WIDE x AS REQ'D STEEL STRAP EMBEDDED IN CMU AND WRAPPED AROUND FURTHEST REBAR WITH MIN. 6" HOOK. FASTEN TO ROOF TRUSS BOT. CHORD w/ (2) ½" THRU BOLTS. ONE STRAP EA. SIDE OF CHIMNEY FOR A TOTAL OF (2) AT THIS LEVEL.
3/16" THICK x 1" WIDE x AS REQ'D STEEL STRAP EMBEDDED IN CMU AND WRAPPED AROUND FURTHEST REBAR WITH MIN. 6" HOOK. FASTEN TO FLOOR JOIST TOP CHORD w/ (2) ½" THRU BOLTS. ONE STRAP EA. SIDE OF CHIMNEY FOR A TOTAL OF (2) AT THIS LEVEL.
FLASHING PER BUILDER
FASTEN ROOF SHT'G TO LEDGER w/ 0.131"x3" NAILS @ 3" o.c.
2x SHEAR WALL -SEE PLAN
P.T. 2x LEDGER FASTENED TO BOND BEAM w/ (2) ½"x6" SIMPSON TITEN HD SCREWS
(2) #5 VERTICALS PER BLOCK. DRILL AND EPOXY INTO (E) BOND BEAM BELOW w/ SIMPSON SET EPOXY (OR APPROVED EQUIVALENT), MIN 8" EMBEDMENT
BOND BEAM w/ (2) #4 @ BASE, LEDGER HEIGHT, TOP, & AT 4'-0" o.c. BTWN.
REMOVE (E) CMU @ (E) CHIMNEY SO THAT TOP LEVEL IS (E) BOND BEAM.
FLOOR SYSTEM -SEE PLANS

SECTION

102 SCALE: 3/4"=1'-0"

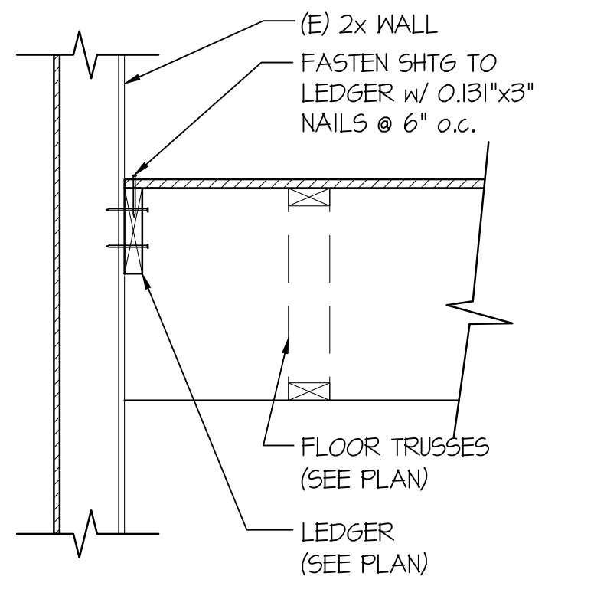
(E) 2x WALL
FASTEN SHTG TO LEDGER w/ 0.131"x3" NAILS @ 6" o.c.
FLOOR TRUSSES (SEE PLAN)
LEDGER (SEE PLAN)

SECTION

101 SCALE: 3/4"=1'-0"

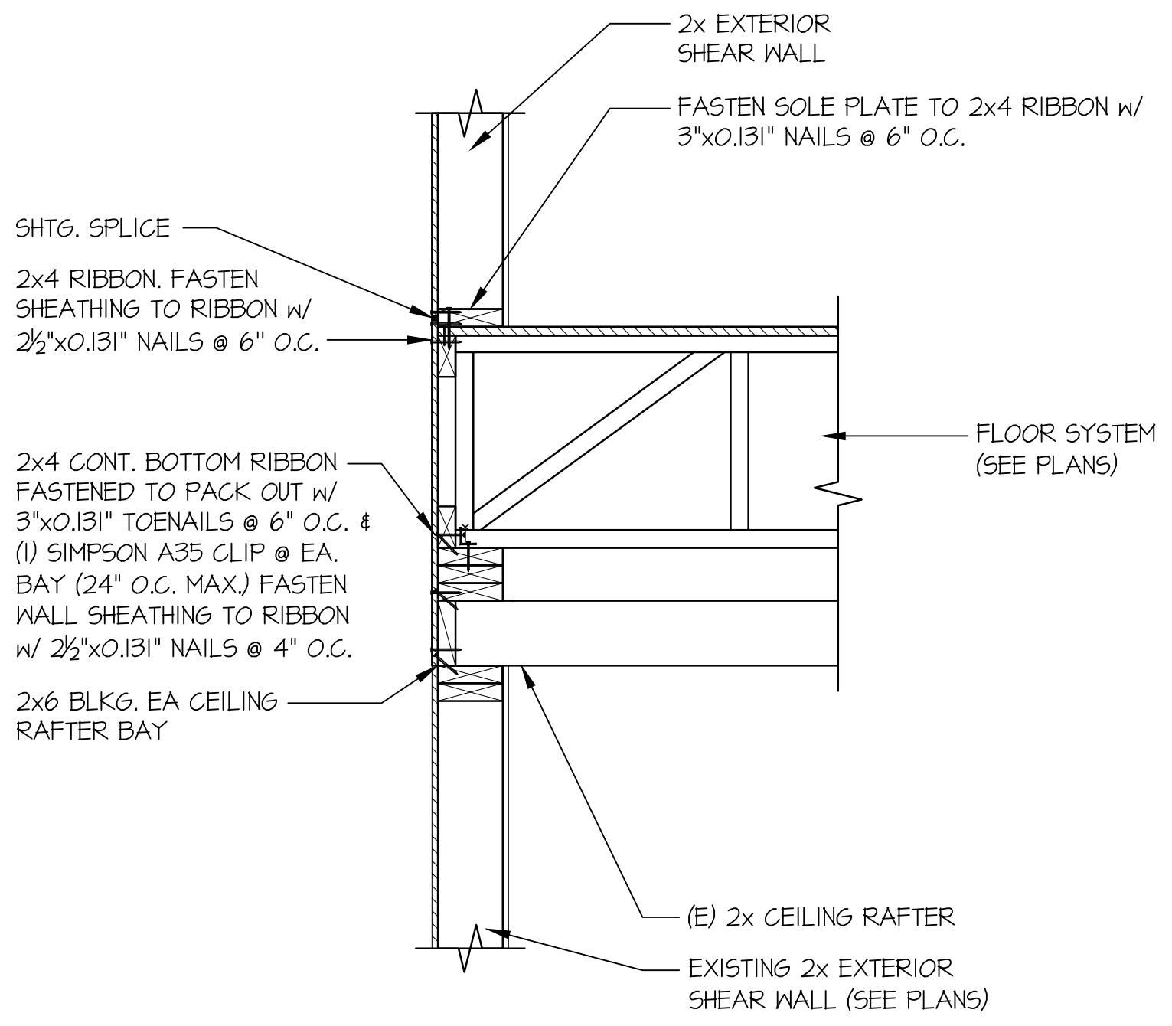
2x EXTERIOR SHEAR WALL
FASTEN SOLE PLATE TO 2x4 RIBBON w/ 3"x0.131" NAILS @ 6" O.C.
SHTG. SPLICE
2x4 RIBBON. FASTEN SHEATHING TO RIBBON w/ 2½"x0.131" NAILS @ 6" O.C.
FLOOR SYSTEM (SEE PLANS)
2x4 CONT. BOTTOM RIBBON FASTENED TO PACK OUT w/ 3"x0.131" TOENAILS @ 6" O.C. & (1) SIMPSON A35 CLIP @ EA. BAY (24" O.C. MAX.) FASTEN WALL SHEATHING TO RIBBON w/ 2½"x0.131" NAILS @ 4" O.C.
2x6 BLKG. EA CEILING RAFTER BAY
(E) 2x CEILING RAFTER
EXISTING 2x EXTERIOR SHEAR WALL (SEE PLANS)

SECTION

103 SCALE: 3/4"=1'-0" PERPENDICULAR FRAMING

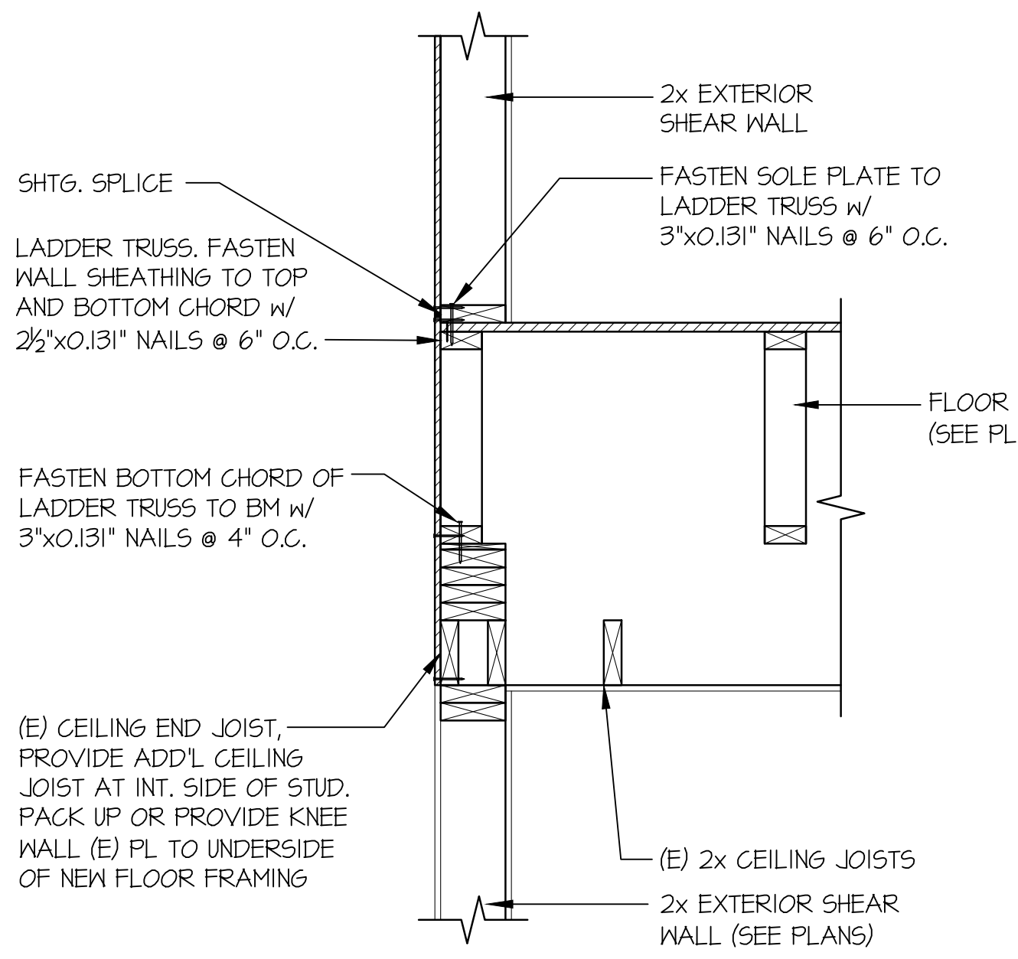
2x EXTERIOR SHEAR WALL
SHTG. SPLICE
FASTEN SOLE PLATE TO LADDER TRUSS w/ 3"x0.131" NAILS @ 6" O.C.
LADDER TRUSS. FASTEN WALL SHEATHING TO TOP AND BOTTOM CHORD w/ 2½"x0.131" NAILS @ 6" O.C.
FLOOR SYSTEM (SEE PLANS)
FASTEN BOTTOM CHORD OF LADDER TRUSS TO BM w/ 3"x0.131" NAILS @ 4" O.C.
(E) CEILING END JOIST, PROVIDE ADD'L CEILING JOIST AT INT. SIDE OF STUD. PACK UP OR PROVIDE KNEE WALL (E) PL TO UNDERSIDE OF NEW FLOOR FRAMING
(E) 2x CEILING JOISTS
2x EXTERIOR SHEAR WALL (SEE PLANS)

SECTION

104 SCALE: 3/4"=1'-0"

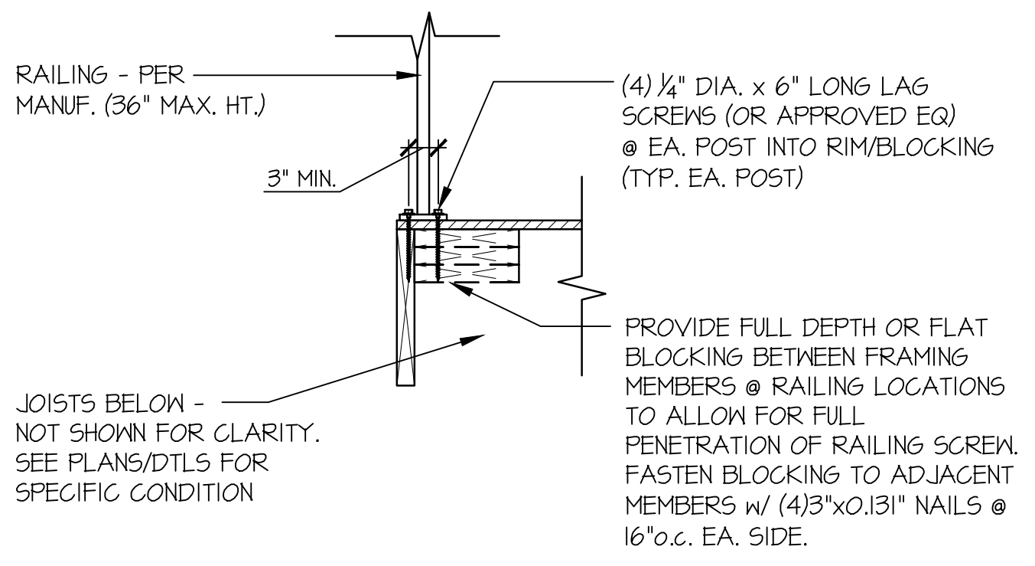
RAILING - PER MANUF. (36" MAX. HT.)
(4) ¼" DIA. x 6" LONG LAG SCREWS (OR APPROVED EQ) @ EA. POST INTO RIM/BLOCKING (TYP. EA. POST)
3" MIN.
PROVIDE FULL DEPTH OR FLAT BLOCKING BETWEEN FRAMING MEMBERS @ RAILING LOCATIONS TO ALLOW FOR FULL PENETRATION OF RAILING SCREW. FASTEN BLOCKING TO ADJACENT MEMBERS w/ (4)3"x0.131" NAILS @ 16"o.c. EA. SIDE.
JOISTS BELOW - NOT SHOWN FOR CLARITY. SEE PLANS/DTLS FOR SPECIFIC CONDITION

TYP. RAILING CONNECTION

A SCALE: 3/4"=1'-0" WOOD FRMG BELOW

seal:

NICHOLAS J. MARTIGNETTI
56478

© copyright : MULHERN & KULP Structural Engineering, Inc.

MULHERN+KULP
RESIDENTIAL STRUCTURAL ENGINEERING
7220 Trade Street, Suite 295, San Diego, CA 92121
p 619-650-0010 ▸ mulhernkulp.com

M&K project number: 203-24016

project mgr: NJM
drawn by: MPM
issue date: 08-30-24

REVISIONS:

ARCHITECTURAL INNOVATIONS

STRUCTURAL DETAILS

LEE REMODEL
8448 N. MERCER WAY,
MERCER ISLAND, WA

sheet:
SD-2